DRAWING MADE IN AMERICAN PROJECTION

© 1971 BY AMP INCORPORATED. ALL RIGHTS RESERVED. AMP PRODUCTS COVERED BY PATENTS AND/OR PATENTS PENDING.

Copyright not to be reproduced without written permission of AMP Incorporated

1 APPROPRIATE P/N (KIT) IS MARKED ON PACKAGE

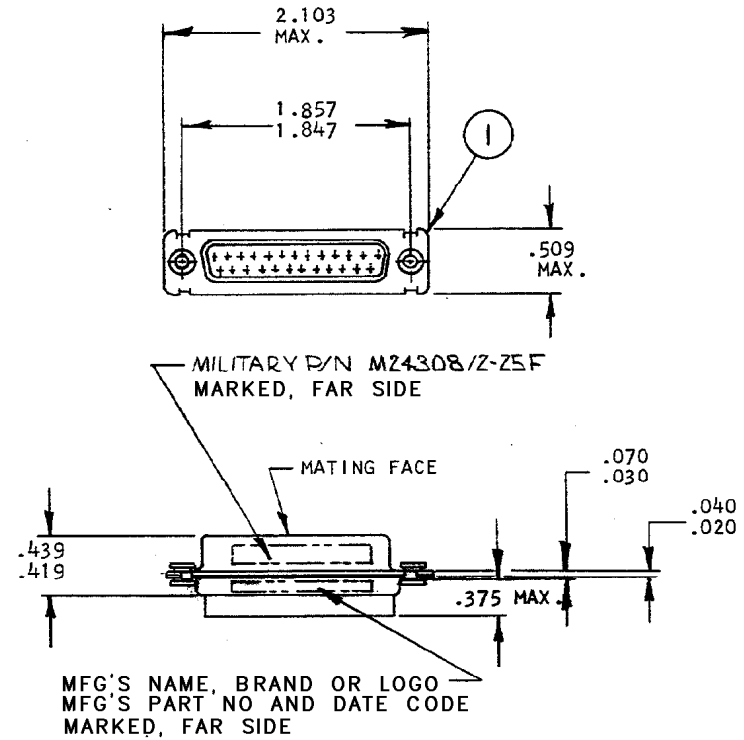

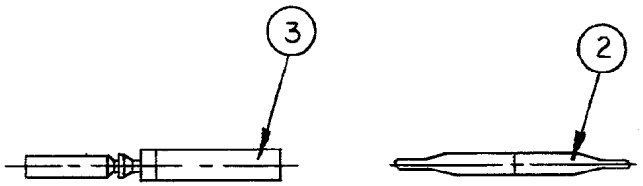

REVISIONS

ZONE	LTR	DESCRIPTION	DATE	APPROVED
	B	REDRAWN PER ECN C-320	4/12/73	
	C	REV. PER ECN C-878	3/18/74	
	D	REV. PER ECN D-019	5/15/74	
	E	REV PER ECN DF-0021; DF0160 & 82676	1-13-88	EAM
	F	ECO-08-023688 PY	11-08	BW
	G	ECO-15-013715 KG	22OCT15	CD

	SUPSD BY 205484-2 & 91067-2	SUPSD BY 205418-1 & 91067-2					
©	X	-	1	MILITARY P/N M24308/2-36F MARKED ON PACKAGE			
©	-	X	1	MILITARY P/N M24308/2-25F MARKED ON PACKAGE			
	25	25	-	B	205090-1	CONTACT , SOCKET , SIZE 20	3
	1	-	1	B	91067-2	INSERTION / EXTRACTION TOOL	2
	1	1	1	B	205418-1	RECEPTACLE ASS'Y. , SIZE # 3	1
	-3	-2	-1	DWG. SIZE	NUMBER	NAME	ITEM No.

1

205484 205484 205484

UNLESS OTHERWISE SPECIFIED DIMENSIONS ARE IN INCHES
TOLERANCES ON:
DECIMALS ±
ANGLES ±

MATERIAL

CONTRACT NO.
DR. L. Mormington 4/12/73
CHK 4/17/73
APPD Dick Baer 4-23-73
REL 4-24-73
DSGN APPD
OTHER APPD

AMP INCORPORATED
HARRISBURG, PENNSYLVANIA

NAME KIT, "HDM" SERIES RECEPTACLE SIZE #3

SIZE	CODE IDENT NO.	NUMBER	REV
B	00779	205484	G

SCALE — SHEET 1 OF 1

CUSTOMER DRAWING

AMP 1470-1 REV (7/68)

Downloaded From Oneyac.com

单击下面可查看定价，库存，交付和生命周期等信息

>>TE Connectivity(泰科)

Downloaded From Oneyac.com