THIS DRAWING IS UNPUBLISHED. RELEASED FOR PUBLICATION 2006
© COPYRIGHT 2006 ALL RIGHTS RESERVED.

LOC	DIST
A1	–

REVISIONS

P	LTR	DESCRIPTION	DATE	DWN	APVD
	J4	ECO-11-005294	27APR11	RK	HMR
	J5	ECR-15-003938	26MAR2015	RK	MKO
	J6	ECR-16-016696	15SEP2017	GA	MKO
	J7	ECR-16-016780	15NOV2017	GR	MKO

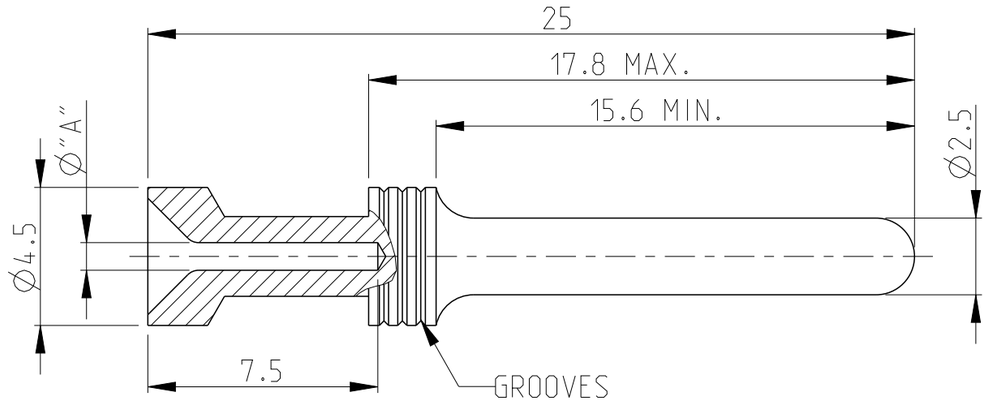

Notes

1. MATERIAL: BRASS
2. FINISH SILVER PLATING: 2 µm Ag MIN. OVER Cu
3. FINISH GOLD PLATING: 0.75 µm Au MIN. OVER Ni
4. FINISH TIN PLATING: 0.6 µm Sn MIN. OVER Cu
5. VENTILATION HOLE PRESENT ON AL PARTS
6. WEIGHT: 1.35 g, PER PIECE (APPROX.)
7. PACKAGING: 50 PIECES IN POLYBAG
8. PACKAGING: 500 PIECES IN POLYBAG & CARTON
9. PACKAGING: 5000 PIECES IN POLYBAG & CARTON
10. PACKAGING: 20000 PIECES IN POLYBAGS & CARTONS
11. SUITABLE SOCKET CONTACT: CUSTOMER DRAWING 1105101
12. SUITABLE INSERTS: SERIES HA, HE, HVE, HVS, CUSTOMER DRAWING
13. SUITABLE CRIMP TOOL: PN 1-1105851-8
14. SUITABLE INSERTION TOOL: PN 0-1102855-6
15. SUITABLE EXTRACTION TOOL: PN 0-1102855-7
16. STANDARDS: DIN EN 61984, DIN EN 60664-1

17. OBSOLETE

ORDERING TEXT	PLATING	CROSS SECTION [MM²]	DIMS "A"	NO.OF GROOVES / MARKINGS	7 P.U.=50 BAG	8 P.U.=500 BOX	9 P.U.=5000 BOX	10 P.U.=20000 BOX
HE/HA-C-Sti.Sn 4,0mm²	TIN 4	4.0	2.8	-	-	~~5-0~~ 17	-	5-3
HE/HA-C-Sti.Sn 2,5mm²	TIN 4	2.5	2.2	3	-	~~4-0~~ 17	-	4-3
HE/HA-C-Sti.Sn 1,5mm²	TIN 4	1.5	1.7	2	-	~~3-0~~ 17	-	3-3
HE/HA-C-Sti.Au 4,0mm²	GOLD 3	4.0	2.8	-	5-2	~~5-9~~ 17	-	-
HE/HA-C-Sti.Au 2,5mm²	GOLD 3	2.5	2.2	3	4-2	~~4-9~~ 17	-	-
HE/HA-C-Sti.Au 1,5mm²	GOLD 3	1.5	1.7	2	3-2	~~3-9~~ 17	-	-
HE/HA-C-Sti.Au 0,75-1,0mm²	GOLD 3	0.75-1.0	1.4	1	2-2	~~2-9~~ 17	-	-
HE/HA-C-Sti.Au 0,5mm²	GOLD 3	0.5	1.1	-	1-2	~~1-9~~ 17	-	-
HE/HA-C-Sti.Au 0,14-0,37mm²	GOLD 3	0.14-0.37	0.9	3	6-2	~~6-9~~ 17	-	-
HE/HA-C-Sti.Ag 4,0mm²	SILVER 2	4.0	2.8	-	5-1	~~5-8~~ 17	-	-
HE/HA-C-Sti.Ag 2,5mm²	SILVER 2	2.5	2.2	3	4-1	4-8	7-1	-
HE/HA-C-Sti.Ag 1,5mm²	SILVER 2	1.5	1.7	2	3-1	~~3-8~~ 17	-	-
HE/HA-C-Sti.Ag 0,75-1,0mm²	SILVER 2	0.75-1.0	1.4	1	2-1	~~2-8~~ 17	-	-
HE/HA-C-Sti.Ag 0,5mm²	SILVER 2	0.5	1.1	-	1-1	~~1-8~~ 17	-	-
HE/HA-C-Sti.Ag 0,14-0,37mm²	SILVER 2	0.14-0.37	0.9	3	6-1	~~6-8~~ 17	-	-

PARTS LIST

THIS DRAWING IS A CONTROLLED DOCUMENT.

DIMENSIONS: mm

TOLERANCES UNLESS OTHERWISE SPECIFIED:
0 PLC ±-
1 PLC ±-
2 PLC ±-
3 PLC ±-
4 PLC ±-
ANGLES ±0.5°

MATERIAL 1

FINISH 2 3 4

DWN H.BRAUN 21Apr2010
CHK –
APVD T.SCHNURPFEIL 29AUG2007
PRODUCT SPEC 108-74004
APPLICATION SPEC 114-74003
WEIGHT –

TE Connectivity

NAME PIN CONTACT SERIES HA, HE, HVE

SIZE	CAGE CODE	DRAWING NO	RESTRICTED TO
A3	00779	C-1105100	–

Customer Drawing | SCALE 5:1 | SHEET 1 OF 1 | REV J7

1470-19 (3/11)

Downloaded From Oneyac.com

单击下面可查看定价，库存，交付和生命周期等信息

>>TE Connectivity(泰科)

Downloaded From Oneyac.com