THIS DRAWING IS UNPUBLISHED. RELEASED FOR PUBLICATION 20
© COPYRIGHT 20 - ALL RIGHTS RESERVED.

LOC	DIST
AA	22

REVISIONS

P	LTR	DESCRIPTION	DATE	DWN	APVD
	B1	REVISED PER ECO-11-005027	21MAY2011	RK	HMR

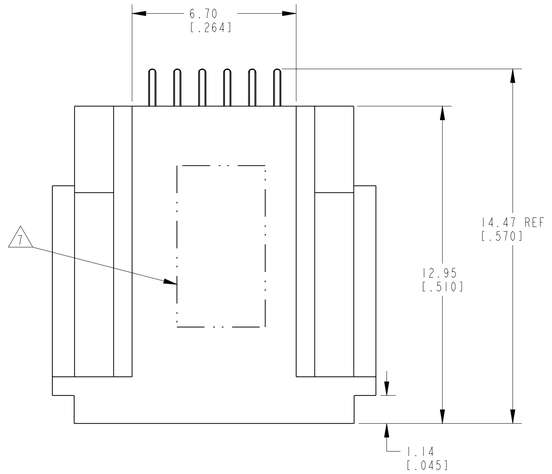

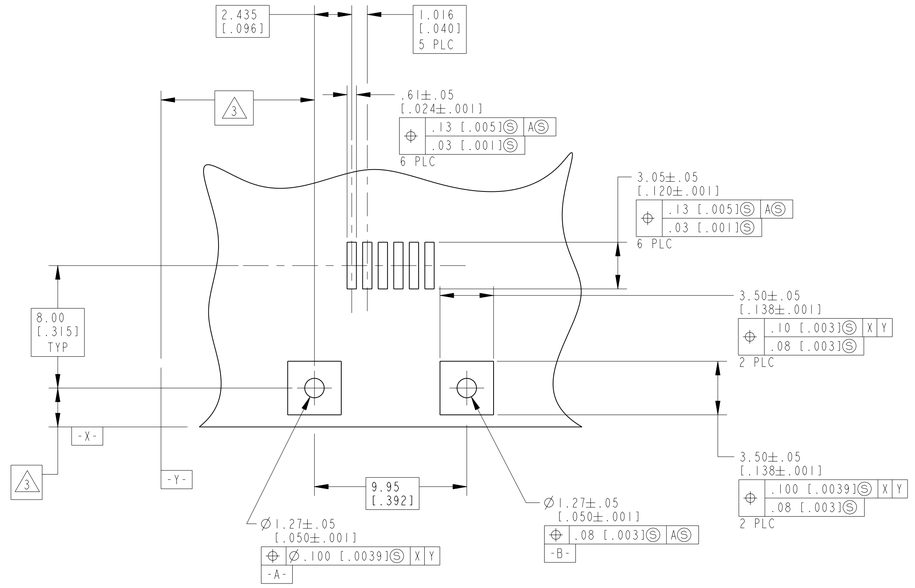

RECOMMENDED PRINTED CIRCUIT BOARD LAYOUT
COMPONENT SIDE
SCALE 5:1

1. MATERIAL: HOUSING - HIGH TEMPERATURE THERMOPLASTIC, COLOR - GRAY
TERMINALS - 0.3[.012] THICK COPPER ALLOY PLATED WITH 1.27µm[.000050] MINIMUM GOLD IN LOCALIZED GOLD PLATE AREA, 2.5 µm[.000100] MINIMUM MATTE TIN ON TERMINATION END, BOTH OVER 1.27µm[.000050] MINIMUM NICKEL OVER ENTIRE TERMINAL.
BOARDLOCK - PHOS BRONZE, 1/2 HARD, 3.81µm[.000150] MINIMUM MATTE TIN OVER 1.27µm[.000050] MINIMUM NICKEL ON TERMINAL END.

2. JACK CAVITY CONFORMS TO FCC 47 RULES AND REGULATIONS, PART 68 SUBPART F.

3. DATUM ESTABLISHED BY CUSTOMER.

4. PACKAGING TAPE AND REEL: (PER EIA 481 SPEC)
32mm WIDE TAPE
24mm POCKET PITCH
560mm REEL DIA
600 PIECES PER REEL

5. PACKAGING TAPE AND REEL: (PER EIA 481 SPEC)
32mm WIDE TAPE
24mm POCKET PITCH
330mm REEL DIA
200 PIECES PER REEL

6. CONNECTOR SHOULD BE POSITIONED THROUGH PANEL CUTOUT AS SHOWN TO SUPPORT TOP OF MODULAR JACK FOR STRAIN RELIEF

7. MANUFACTURING DATE CODE LOCATED APPROXIMATELY AS SHOWN. FIRST 2 DIGITS ARE YEAR, SECOND 2 DIGITS ARE WORK WEEK, AND LAST DIGIT IS THE DAY OF THE WEEK

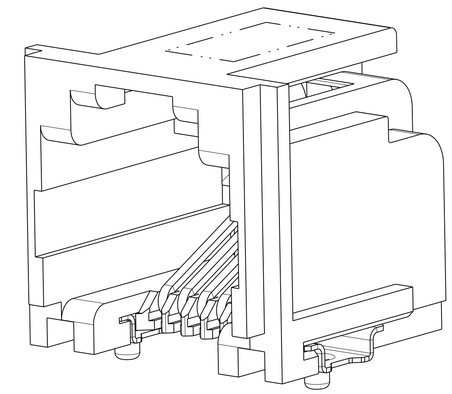

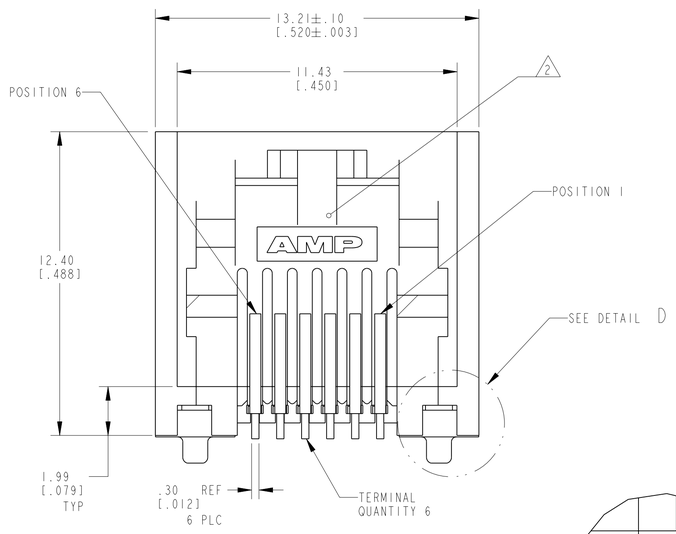

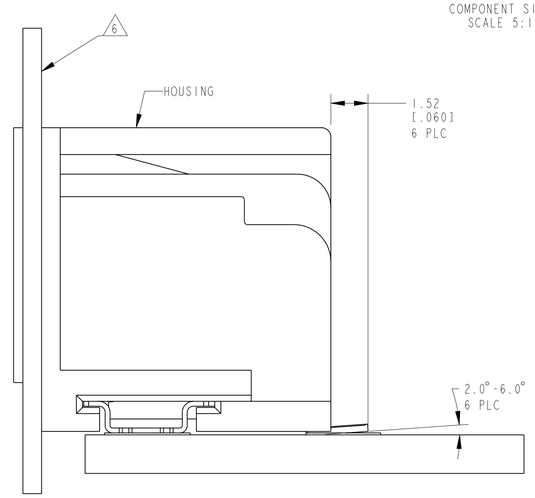

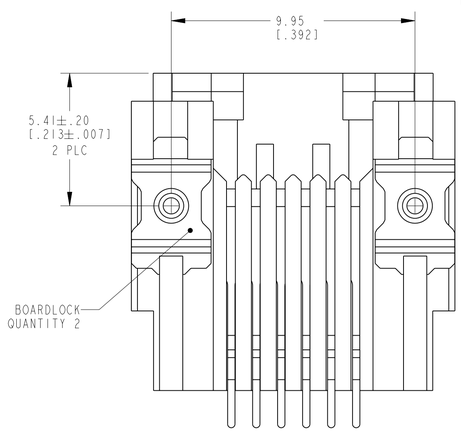

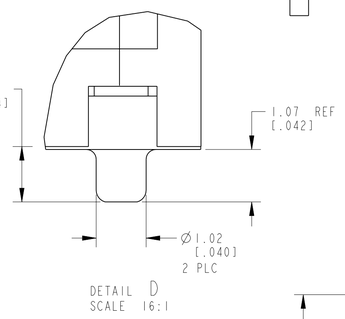

DETAIL D
SCALE 16:1

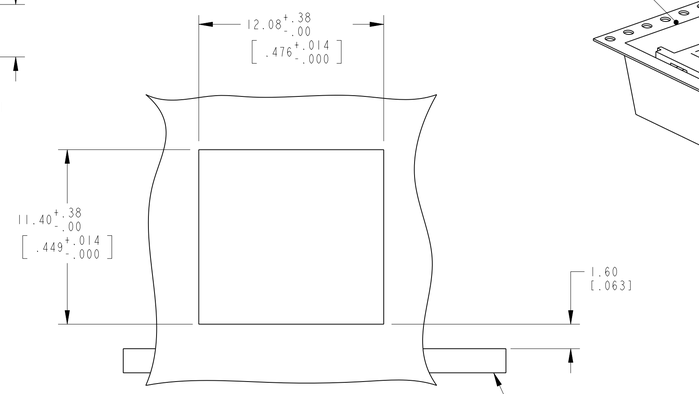

RECOMMENDED PANEL CUTOUT
SCALE 5:1

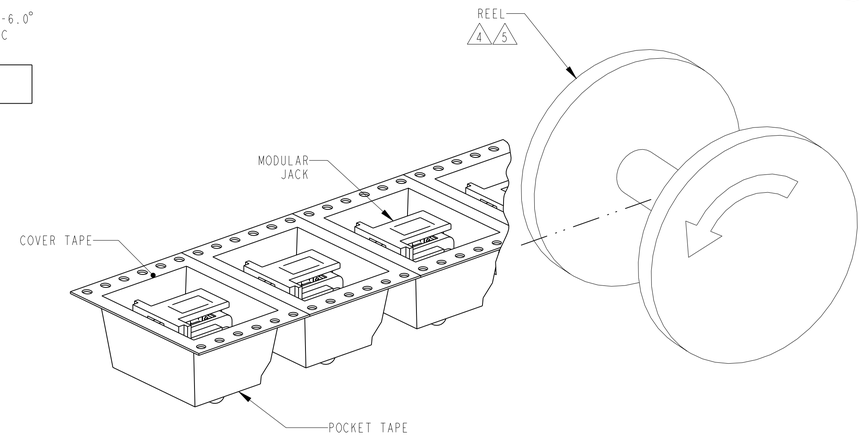

NONE	5	5406514-3
7	5	5406514-2
7	4	5406514-1
MARKING	PACKAGING	PART NUMBER

THIS DRAWING IS A CONTROLLED DOCUMENT.

DIMENSIONS: mm[INCHES]

TOLERANCES UNLESS OTHERWISE SPECIFIED:
0 PLC ±-
1 PLC ±-
2 PLC ±-
3 PLC ±0.13[.005]
4 PLC ±-
ANGLES ±1

MATERIAL: SEE NOTE 1
FINISH: SEE NOTE 1

DWN G. ATTADIA 28JUL2005
CHK J. WESTMAN 28JUL2005
APVD S. FLICKINGER 28JUL2005
PRODUCT SPEC 108-1689
APPLICATION SPEC 114-6040
WEIGHT .95 GRAMS

TE Connectivity

NAME: MODULAR JACK ASSEMBLY, 6/6 POSITION, SURFACE MOUNT, RIGHT ANGLE, WITH INWARD BOARDLOCKS

SIZE A1 | CAGE CODE 00779 | DRAWING NO C-5406514 | RESTRICTED TO -

CUSTOMER DRAWING | SCALE 8:1 | SHEET 1 OF 1 | REV B1

4805 (3/11)

Downloaded From Oneyac.com

Pro/ENGINEER DRAWING

单击下面可查看定价，库存，交付和生命周期等信息

>>TE Connectivity(泰科)

Downloaded From Oneyac.com