THIS DRAWING IS UNPUBLISHED. RELEASED FOR PUBLICATION -
© COPYRIGHT - - ALL RIGHTS RESERVED.

LOC	DIST
AP	-

creo
Creo Parametric 2.0
DO NOT REVISE EXCEPT BY CAD

REVISIONS

P	LTR	DESCRIPTION	DATE	DWN	APVD
	D1	REVISED DRAWING ECO-14-014682	30SEP2014	NCL	DAO
	D2	REVISED DRAWING ECO-14-019131	05JAN2015	NCL	NMS
	D3	REVISED DRAWING ECO-16-006926	06MAY2016	NCL	NMS
	D4	REVISED DRAWING ECO-18-008340	29MAY2018	NMS	JMM

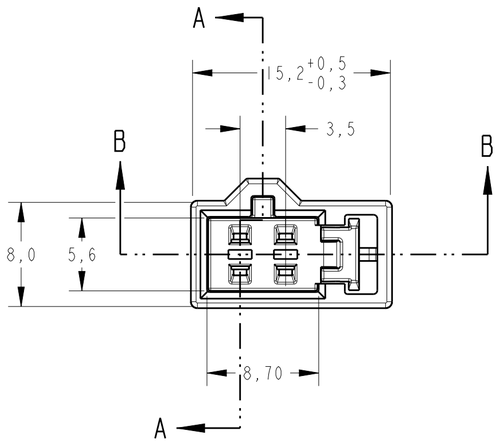

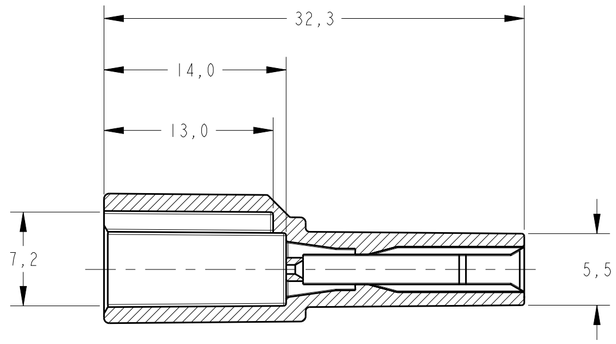

SECTION A-A

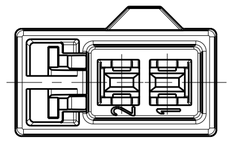

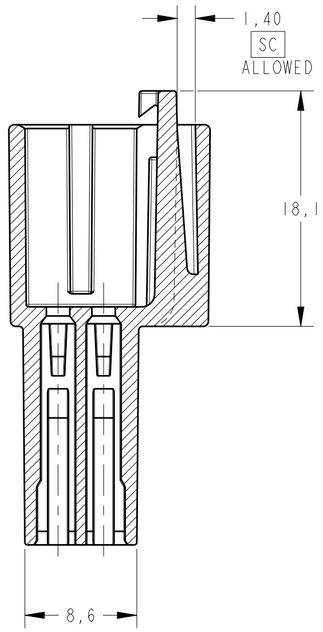

SECTION B-B

1 -SC - CARACTERÍSTICA SIGNIFICATICA, CONFORME TE 102-37072.

CC - CARACTERÍSTICA CRÍTICA, CONFORME TE 102-37072.

1 -SC - SIGNIFICANT CHARACTERISTIC, ACCORDING TO TE 102-37072.
CC - CRITICAL CHARACTERISTIC, ACCORDING TO TE 102-37072.

GRAVAÇÃO MARKING
LOGOTIPO AMP AMP LOGO
CÓDIGO PAÍS PRODUTOR MANUFACTURER COUNTRY CODE
NOMENCLATURA MATERIAL MATERIAL NOMENCLATURE
NÚMERO COMPONENTE TE TE COMPONENT NUMBER
NÚMERO CAVIDADE CAVITY NUMBER
IDENTIFICAÇÃO CIRCUITO CIRCUIT IDENTIFICATION
LOGOTIPO VW VW LOGO
NÚMERO PEÇA CLIENTE CUSTOMER PART NUMBER

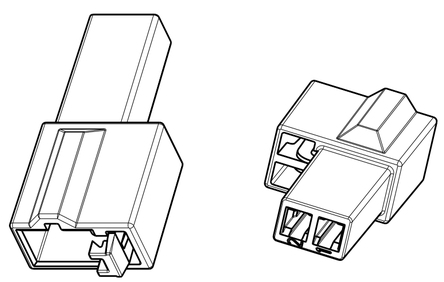

PERSPECTIVE VIEWS
SCALE 2:1

PRETO / BLACK	PA 6.6	493224-1
FINISH	MATERIAL	PART NUMBER

THIS DRAWING IS A CONTROLLED DOCUMENT.

DIMENSIONS: mm

TOLERANCES UNLESS OTHERWISE SPECIFIED:
0 PLC ±-
1 PLC ±0,3
2 PLC ±0,2
3 PLC ±-
4 PLC ±-
ANGLES ±1°

MATERIAL: SEE TABLE
FINISH: SEE TABLE

DWN 21MAR1997 M.R.BRIZ
CHK 26JUN1997 J.R.GOLDSCHMIDT
APVD 20AUG1997 A.VICENZA
PRODUCT SPEC -
APPLICATION SPEC -
WEIGHT -

TE Connectivity

NAME HOUSING, 2 POSN., MICRO TIMER TAB.
HOUSING, 2 POSN.,
MICRO TIMER TAB.

SIZE	CAGE CODE	DRAWING NO	RESTRICTED TO
A2	00779	C-493224	-

CUSTOMER DRAWING | SCALE 3:1 | SHEET 1 OF 1 | REV D4

1471-9 (3/11)

Downloaded From Oneyac.com

单击下面可查看定价，库存，交付和生命周期等信息

>>TE Connectivity(泰科)

Downloaded From Oneyac.com