THIS DRAWING IS UNPUBLISHED. RELEASED FOR PUBLICATION 20
© COPYRIGHT 20 - ALL RIGHTS RESERVED.

| LOC | DIST |
|---|---|
| FT | 0 |

REVISIONS

| P | LTR | DESCRIPTION | DATE | DWN | APVD |
|---|---|---|---|---|---|
| | A1 | REVISED PER ECO-11-007905 | 15APR2011 | HMR | CR |

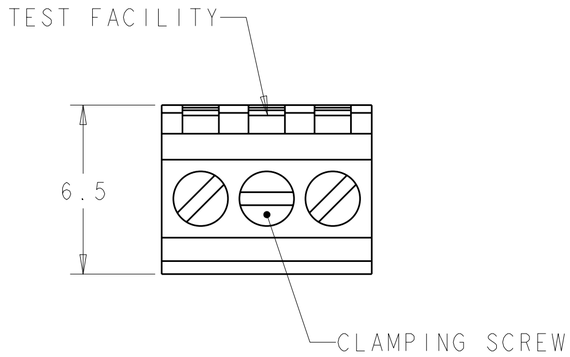


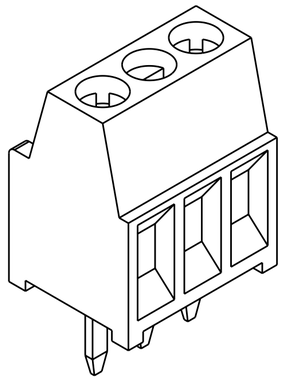

1546215-3 AS SHOWN

⚠1 MATERIAL AND FINISH:
HOUSING: PA 6-6, UL 94-V0, COLOR: GRAY.
CLAMP: BRASS, NICKEL PLATED.
TERMINAL: BRASS, TIN PLATED.
CLAMPING SCREW: M1.6, STAINLESS STEEL.

2. SUITABLE FOR 1,6-2,4mm PC BOARD THICKNESS.

3. WIRE RANGE: 16-30 AWG.

4. RECOGNIZED UNDER THE COMPONENT PROGRAM OF UNDERWRITERS LABORATORIES INC. FILE N° E60677.

5. POSSIBILITY TO PUT TWO OR THREE TERMINAL BLOCKS SIDE BY SIDE BY INCREASING THE DIAMETER OF THE PCB HOLES TO MINIMUM 1,3mm.

6. TORQUE: 1.73 in-lbs MAX

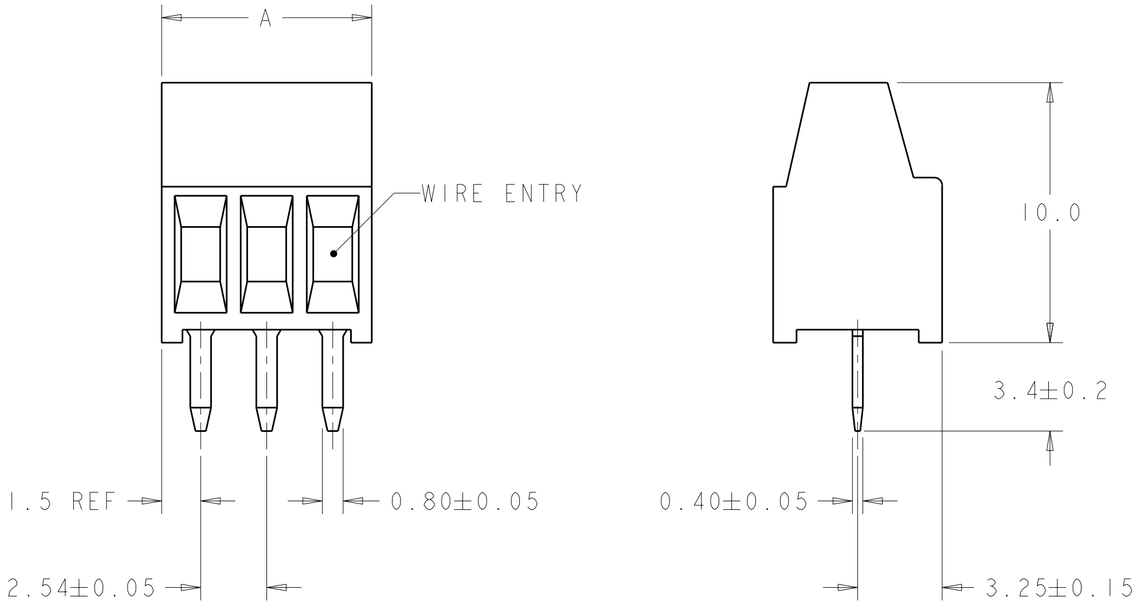


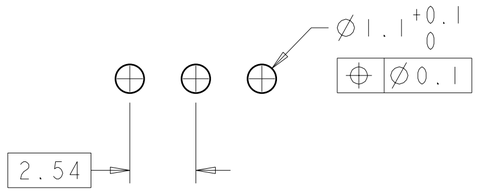


RECOMMENDED PC BOARD LAYOUT

| A | NO OF POSN | PART NUMBER |
|---|---|---|
| 30.94 | 12 | 1-1546215-2 |
| 28.40 | 11 | 1-1546215-1 |
| 25.86 | 10 | 1-1546215-0 |
| 23.32 | 9 | 1546215-9 |
| 20.78 | 8 | 1546215-8 |
| 18.24 | 7 | 1546215-7 |
| 15.70 | 6 | 1546215-6 |
| 13.16 | 5 | 1546215-5 |
| 10.62 | 4 | 1546215-4 |
| 8.08 | 3 | 1546215-3 |
| 5.54 | 2 | 1546215-2 |

THIS DRAWING IS A CONTROLLED DOCUMENT.

DIMENSIONS: mm

TOLERANCES UNLESS OTHERWISE SPECIFIED:
0 PLC ±-
1 PLC ±.3
2 PLC ±.25
3 PLC ±-
4 PLC ±-
ANGLES ±2

MATERIAL ⚠1 -
FINISH ⚠1 -

DWN S.WELDON 09MAR2004
CHK C.RICHARD 09MAR2004
APVD C.RICHARD 09MAR2004
PRODUCT SPEC 108-20166
APPLICATION SPEC 114-20079
WEIGHT -

TE Connectivity

NAME TERMINAL BLOCK ASSEMBLY, PCB MOUNT, SIDE WIRE ENTRY, STACKING, 2.54mm PITCH

| SIZE | CAGE CODE | DRAWING NO | RESTRICTED TO |
|---|---|---|---|
| A2 | 00779 | C-1546215 | - |

CUSTOMER DRAWING | SCALE 5:1 | SHEET 1 OF 1 | REV A1

1471-9 (3/11)

Pro/ENGINEER DRAWING

Downloaded From Oneyac.com

单击下面可查看定价，库存，交付和生命周期等信息

>>TE Connectivity(泰科)

Downloaded From Oneyac.com