THIS DRAWING IS UNPUBLISHED. RELEASED FOR PUBLICATION -,- .
© COPYRIGHT - BY TYCO ELECTRONICS CORPORATION. ALL INTERNATIONAL RIGHTS RESERVED.

LOC	DIST
GP	00

REVISIONS

P	LTR	DESCRIPTION	DATE	DWN	APVD
	B	REV PER ECO-08-015320	23JUN08	RG	DO

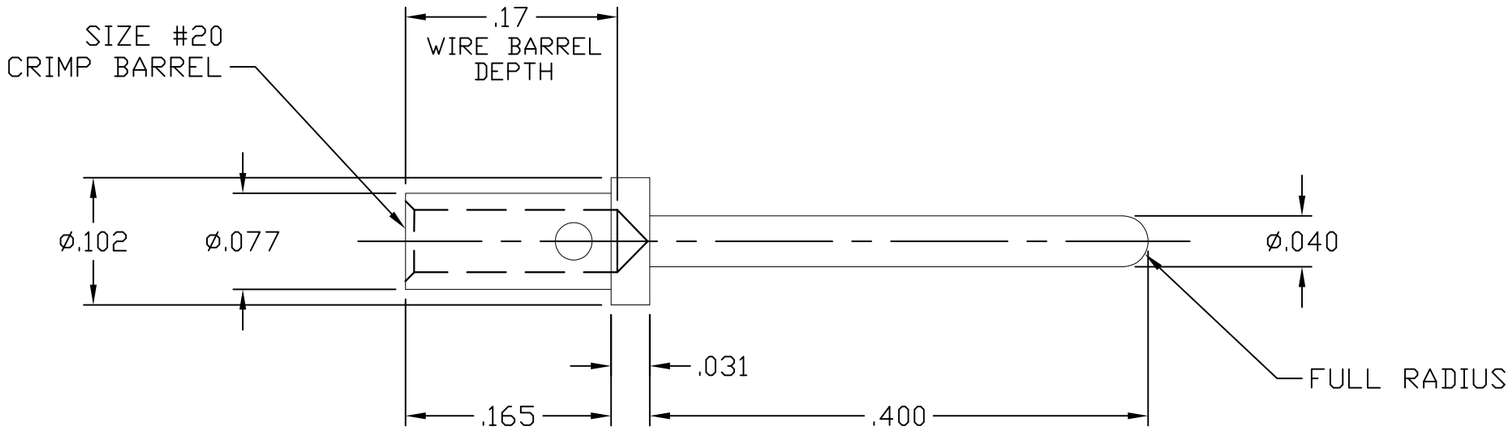

6. FOR TERMINATION, USE FOLLOWING EQUIPMENT:
SHOWN FOR REFERENCE ONLY (USER SUPPLIED)
CRIMP TOOL: M22520/1-01
TURRET HEAD/LOCATOR: M22520/1-02

5 FINISH: GOLD PLATED, .000030 MIN THICK
OVER NICKEL PLATED, .000050 MIN THICK

4 FINISH: GOLD PLATED, .000010 MIN THICK
OVER NICKEL PLATED, .000050 MIN THICK

3. MATERIAL: BRASS ALLOY.

2. ITEMS PROVIDED TO THIS SPECIFICATION SHALL BE IDENTIFIED ON THE CONTAINER WITH THE FOLLOWING INFORMATION: PART NUMBER & DATE CODE OF MANUFACTURE.

1. PART NUMBER CHANGES AND OR DESIGN CHANGES AFFECTING ITEM INTERCHANGEABILITY REQUIRE PRIOR TYCO ELECTRONICS APPROVAL AND AUTHORIZATION BY REVISION TO THIS DRAWING.

5	1650162-3
4	1650162-2
DESCRIPTION	PART NUMBER

THIS DRAWING IS A CONTROLLED DOCUMENT.

DIMENSIONS: INCHES

TOLERANCES UNLESS OTHERWISE SPECIFIED:
0 PLC ± -
1 PLC ± -
2 PLC ± .02
3 PLC ± .010
4 PLC ± -
ANGLES ± .5

MATERIAL -
FINISH -

DWN HA/GRZYBOWSKI 04/10/06
CHK D.ORRIS -
APVD FLICKINGER 04/10/06
PRODUCT SPEC —
APPLICATION SPEC —
WEIGHT —

Tyco Electronics
Tyco Electronics Corporation
Harrisburg, PA 17105-3608

NAME
CONTACT, PIN, SIZE No.20
CRIMP
POSTMATE, .27 PIN EXT.

SIZE	CAGE CODE	DRAWING NO	RESTRICTED TO
A3	00779	C-1650162	—

CUSTOMER DRAWING

SCALE	SHEET	REV
8:1	1 OF 1	B

Downloaded From Oneyac.com

单击下面可查看定价，库存，交付和生命周期等信息

>>TE Connectivity(泰科)

Downloaded From Oneyac.com