THIS DRAWING IS UNPUBLISHED. RELEASED FOR PUBLICATION 20
© COPYRIGHT 20 BY TYCO ELECTRONICS CORPORATION. ALL RIGHTS RESERVED.

LOC	DIST
IN	00

REVISIONS

P	LTR	DESCRIPTION	DATE	DWN	APVD
	5	REV PER ECO-09-003117	12FEB2009	MBH	BB
	A	REV PER ECO-10-001383	01FEB2010	MBH	BB

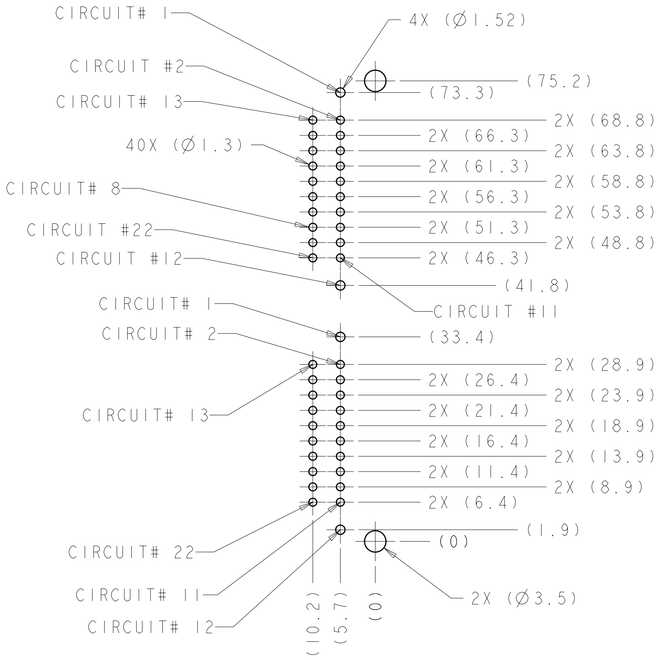

RECOMMENDED
PCB LAYOUT
CONNECTOR SIDE
(RECOMMENDED BOARD THICKNESS 1.57mm)

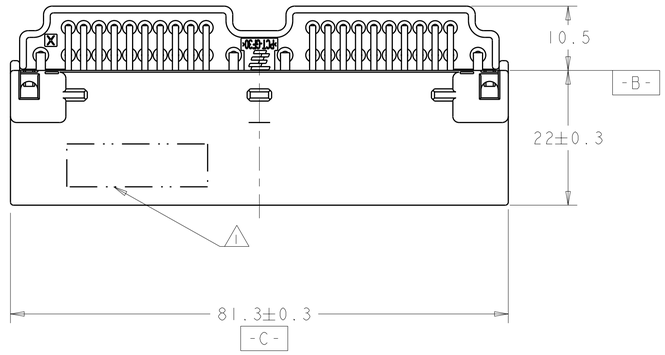

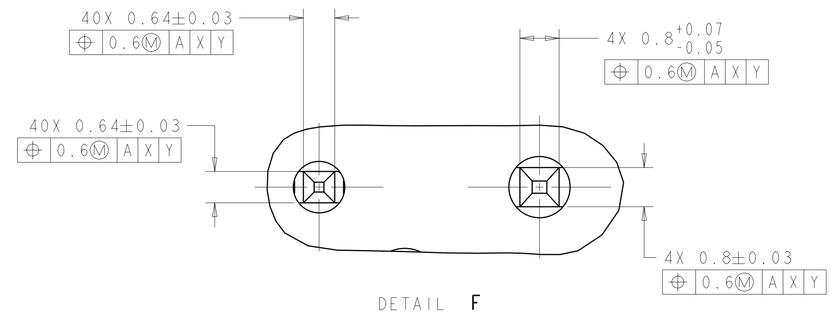

DETAIL F
SCALE 16:1

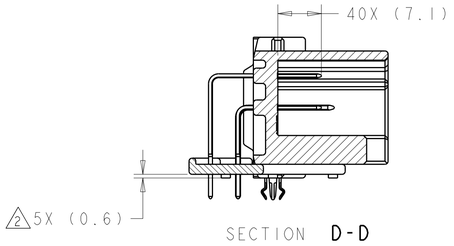

SECTION D-D

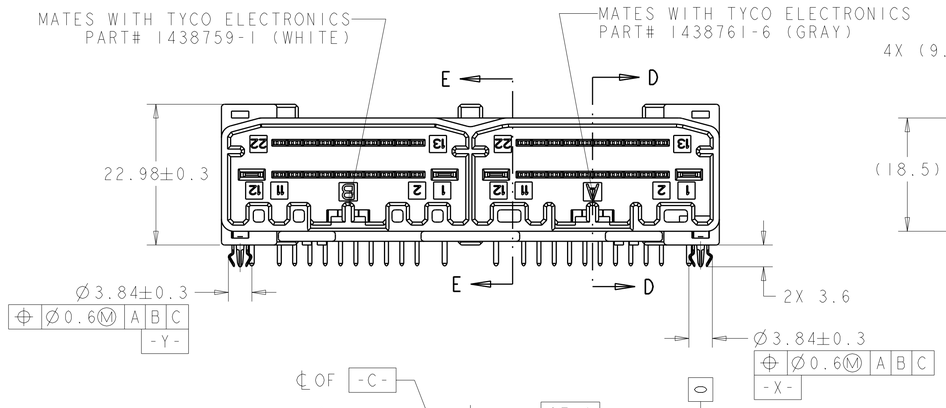

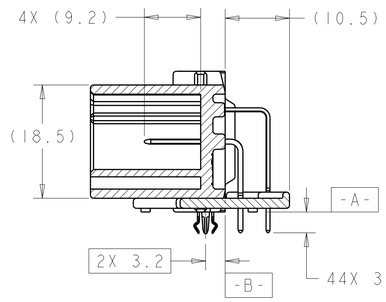

SECTION E-E

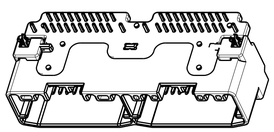

9-1924089-6 REF
SCALE 1:1

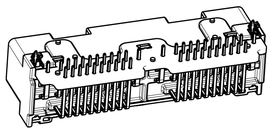

9-1924089-6 REF
SCALE 1:1

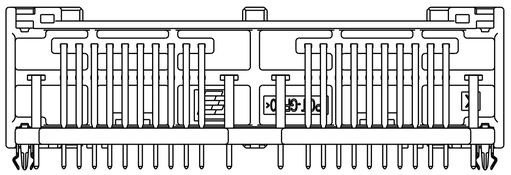

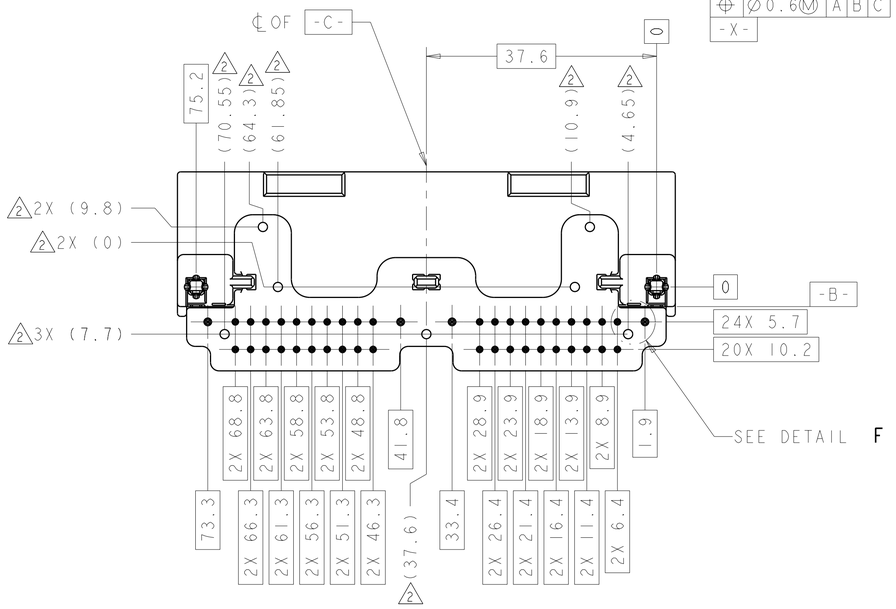

PCT	GRAY	BRASS	POST-TIN	BRASS	POST-TIN	PCT	GRAY	9-1924089-6
MATERIAL	FINISH	MATERIAL	FINISH	MATERIAL	FINISH	MATERIAL	COLOR	PART NO
TINE PLATE		BOARDLOCK		CONTACT		HOUSING		

NOTES:
1. MARK DATE CODE IN APPROXIMATE LOCATION.
2. STAND-OFF FEATURES

THIS DRAWING IS A CONTROLLED DOCUMENT FOR TYCO ELECTRONICS CORPORATION. IT IS SUBJECT TO CHANGE. CONTACT THE ISSUING ORGANIZATION SHOULD BE CONTACTED FOR THE LATEST REVISION.

DIMENSIONS: mm

TOLERANCES UNLESS OTHERWISE SPECIFIED:
0 PLC ±0.0
1 PLC ±0.3
2 PLC ±0.1
3 PLC ±0.0
4 PLC ±0.0
ANGLES ±2°

MATERIAL -
FINISH -

DWN M. HITCHCOCK 07JAN2008
CHK B. BUCHTER 07JAN2008
APVD B. BUCHTER 07JAN2008
PRODUCT SPEC TBD
APPLICATION SPEC TBD
WEIGHT TBD

Tyco Electronics
Tyco Electronics
Harrisburg, PA 17105-3608

NAME
44P CAP ASSEMBLY 040/2.8 HYBRID
(2X- 22P HYBRID)
PINS SAME SIDE OF CONNECTOR LATCH

SIZE A1 | CAGE CODE 00779 | DRAWING NO C-1924089 | RESTRICTED TO -

CUSTOMER DRAWING | SCALE 2:1 | SHEET 1 OF 1 | REV A

Downloaded From Oneyac.com

单击下面可查看定价，库存，交付和生命周期等信息

>>TE Connectivity(泰科)

Downloaded From Oneyac.com