REVISION(S)			
LTR	DESCRIPTION	INIT	APP'D
O	ECN: 0S60-0078-04	E.T 03/26/04	B.P 04/05/04
A	ECN: 0S60-0060-05	E.T 3/10/05	B.P 6/15/05
B	ECR-06-007721	E.T 3/29/06	C.W 3/29/06

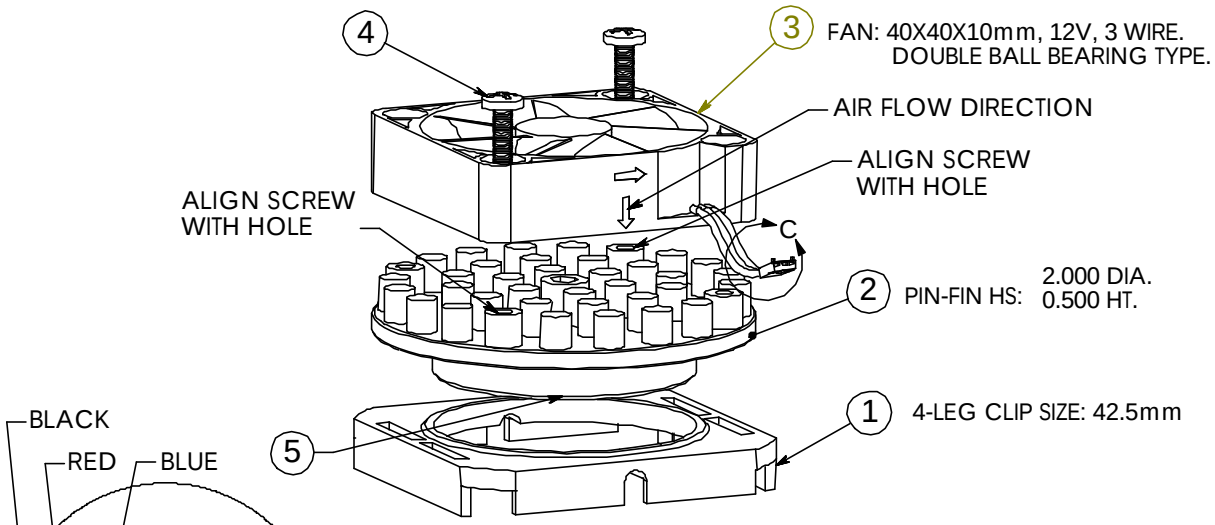

NOTE:

1. MATERIAL:

   HEAT SINK: ALUM. (BLACK ANODIZE)
   CLIP: BLACK PEI (UL94-VO)

2. BEFORE THE HEATSINK APPLICATION, THE USER SHOULD IDENTIFY THE SPECIFICATION OF MAXIMUM LOAD ON THE BGA PACKAGE.

   HEATSINK TORQUE SPECIFICATIONS CONVERTED TO FORCE.

   BARE DIE PACKAGE:
   2.5 INCH - LB TORQUE = 7.8 LBS FORCE
   3.0 INCH - LB TORQUE = 9.4 LBS FORCE

   FULL SIZE LID PACKAGE:
   2.5 INCH - LB TORQUE = 6.3 LBS FORCE
   3.0 INCH - LB TORQUE = 7.6 LBS FORCE

3. REMOVE CLIP WITH REMOVAL TOOL P/N: 1542616-1.

4. RoHS COMPLIANT AND CERTIFIED.

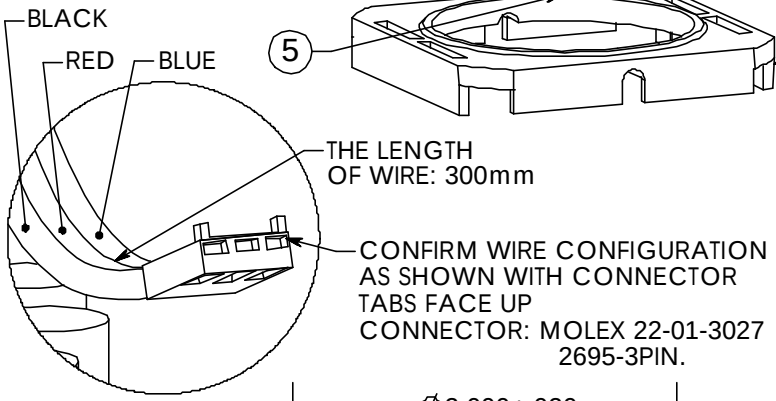

DETAIL C
SCALE 4 : 1

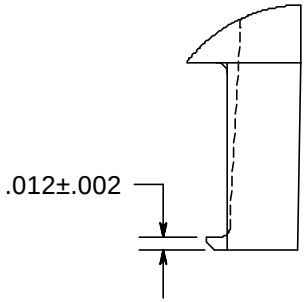

DETAIL A
SCALE 6 : 1

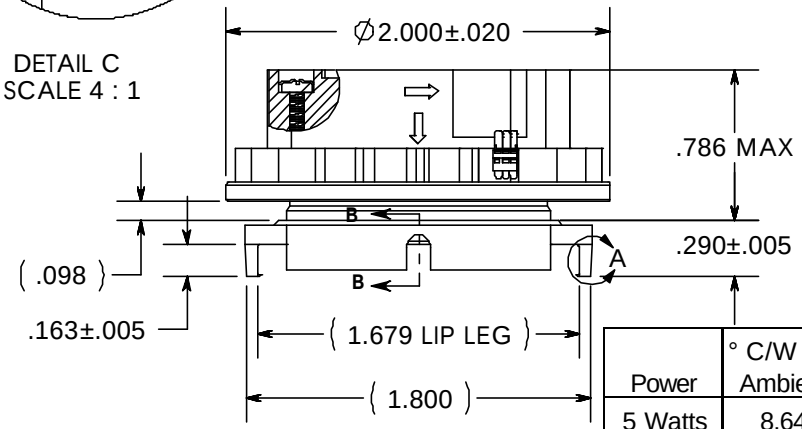

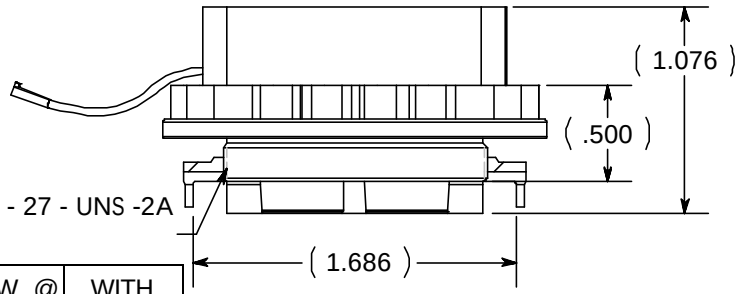

SECTION B-B

Power	° C/W @ Ambient	° C/W @ 200 LFM	° C/W @ 400 LFM	° C/W @ 600 LFM	WITH FAN
5 Watts	8.64	4.45	2.80	2.00	2.51
10 Watts	7.86	4.49	2.89	2.38	2.36
15 Watts	7.38	4.57	2.95	2.42	2.42

CUSTOMER DRAWING

SPECIFICATIONS ARE SUBJECT TO CHANGE WITHOUT NOTICE

ITEM	DESCRIPTION	QTY
1	MOUNTING CLIP	1
2	HEAT SINK	1
3	FAN	1
4	SCREW	2
5	INTERFACE	1

DO NOT SCALE

tyco / Electronics — Attleboro Falls Massachussetts 02763

UNLESS OTHERWISE SPECIFIED TOLERANCES ARE:
.XX ± .
.XXX ± .
.XXXX ± .
ANGLES ± °

DRAWN BY: E.TAO — DATE: 3/25/04
ENGINEER: B. PETROCELLI — DATE: 04/05/04
FILENAME | PROJECT | SYSTEM

MATERIAL: SEE NOTE
FINISH: SEE NOTE

CONFIDENTIAL PROPERTY OF TYCO ELECTRONICS. NOT TO BE DISCLOSED TO OTHERS. REPRODUCED OR USED FOR ANY PURPOSES EXCEPT AS AUTHORIZED IN WRITING BY AN AUTHORIZED OFFICIAL OF TYCO. MUST BE RETURNED TO TYCO ON DEMAND, ON COMPLETION OF ORDERS OR OTHER PURPOSES FOR WHICH LENT.

TITLE: **42.5mm HS ASS'Y (HTS270B-U)**

DIMENSONS ARE IN: INCHES
SCALE: 1:1
PART NO: **3-1542006-9**
SHEET: 1 OF 1
THIRD ANGLE PROJECTION
SIZE: A
DWG. NO. **C-3-1542006-9**
REV: **B**

Downloaded From Oneyac.com

单击下面可查看定价，库存，交付和生命周期等信息

>>TE Connectivity(泰科)

Downloaded From Oneyac.com