THIS DRAWING IS UNPUBLISHED. RELEASED FOR PUBLICATION -,- .
© COPYRIGHT - By - ALL RIGHTS RESERVED.

REVISIONS

P	LTR	DESCRIPTION	DATE	DWN	APVD
	C	REVISED PER ECO-17-002173	09MAR2017	SY	SY

TE PN	OLD NUMBER
2-1392009-5	V42254-B7291-C498

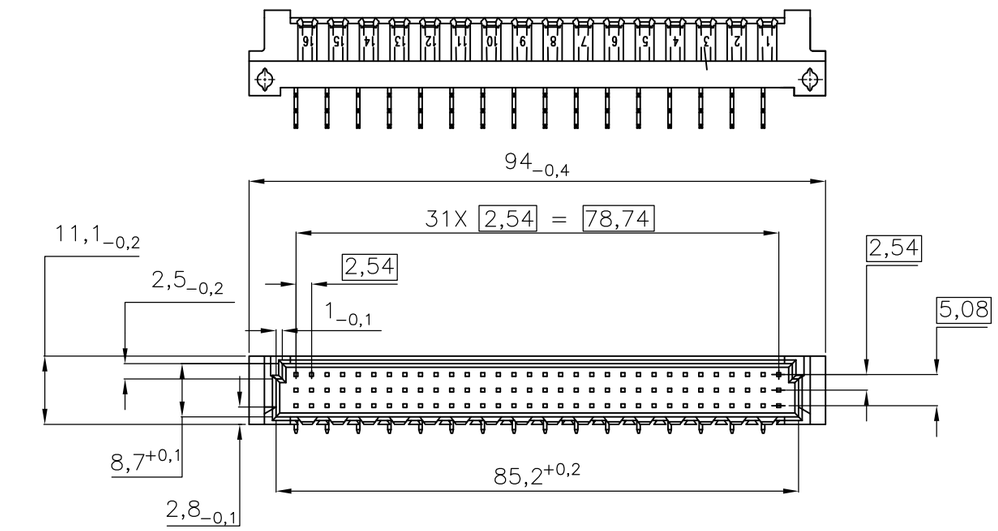

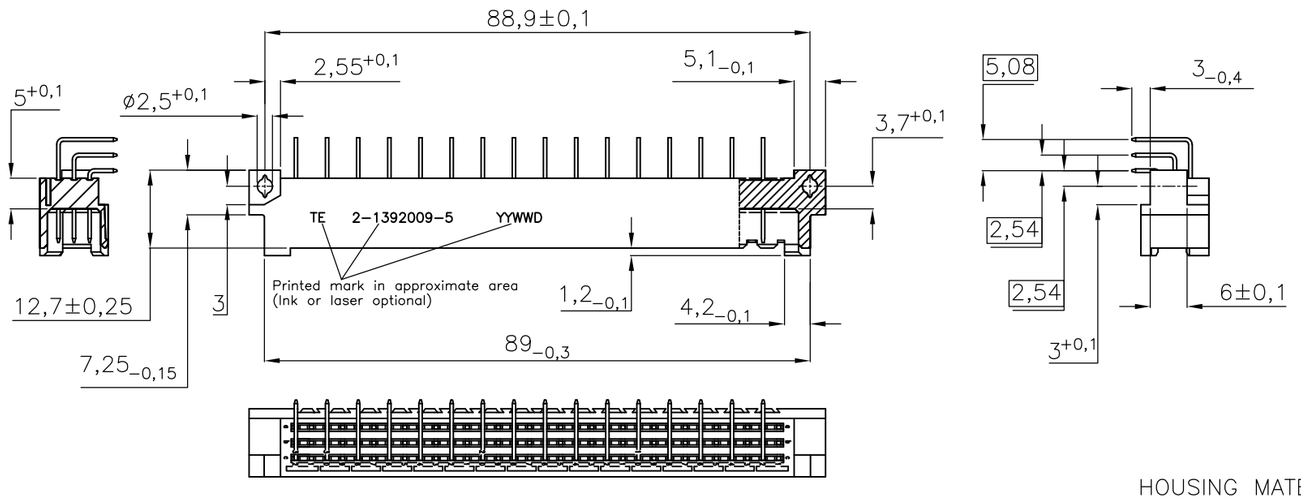

CONTACT LENGTHS (5:1)

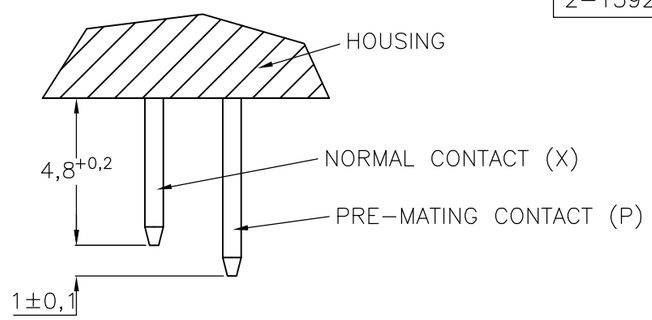

ACTIVE PART NUMBERS. CONTACT
TYCO ELECTRONICS FOR
OTHER CONFIGURATION AVAILABILITY

CONTACT ASSIGNMENT (48 PINS)

```
                    1                   2                   3
      1 2 3 4 5 6 7 8 9 0 1 2 3 4 5 6 7 8 9 0 1 2 3 4 5 6 7 8 9 0 1 2
ROW A: O P O X O X O X O X O X O X O X O X O X O X O X O X O X O X
    B: O X O X O X O X O X O X O X O X O X O X O X O X O X O X O X
    C: O X O X O X O X O P O X O X O X O X O X O X O X O X O X O X
```

O = NO CONTACT
X = CONTACT
P = PRE-MATING CONTACT

ALL DIMENSIONS ARE IN MM

HOUSING MATERIAL: PBT 30% GLASSFILLED (UL94V-0), GREY
CONTACT MATERIAL: COPPER ALLOY
PLATING : - CONTACT AREA: Pd+Au OR Au
PERF. LEVEL 2 ACC. IEC 603-2
- TERMINATION: Sn

MOUNTING HOLES IN PCB

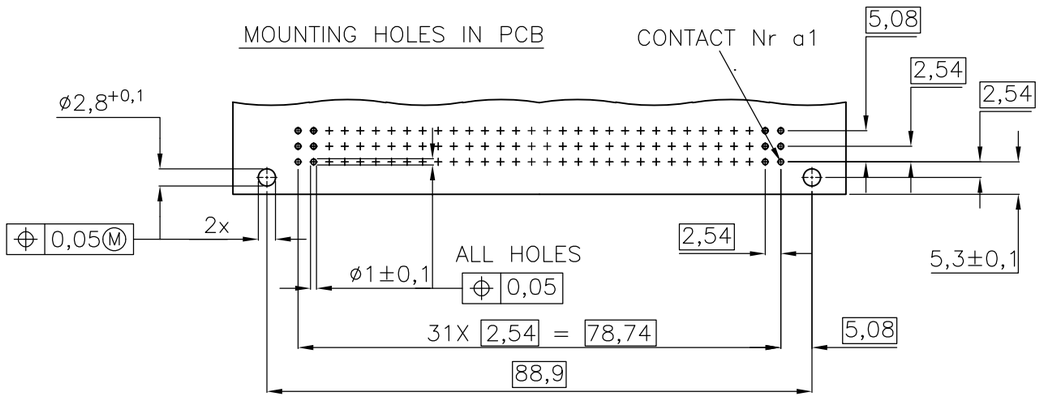

THIS DRAWING IS A CONTROLLED DOCUMENT.

DIMENSIONS: mm

TOLERANCES UNLESS OTHERWISE SPECIFIED:
0 PLC ±-
1 PLC ±-
2 PLC ±-
3 PLC ±-
4 PLC ±-
ANGLES ±-

MATERIAL -
FINISH -

DWN	GNANI JADAV A E	12MAR09
CHK	M.KOMAR	17MAR09
APVD	M.WESTEN	17MAR09
PRODUCT SPEC	—	
APPLICATION SPEC	—	
WEIGHT	0.000000	

TE Connectivity

NAME
EUROCARD PIN ASSEMBLY
TYPE C WITH CODING AND PRECENTERING
-

SIZE	CAGE CODE	DRAWING NO	RESTRICTED TO
A3	00779	C-2-1392009-5	—

CUSTOMER DRAWING | SCALE NTS | SHEET 1 OF 1 | REV C

1470-19 (1/15)

Downloaded From Oneyac.com

单击下面可查看定价，库存，交付和生命周期等信息

>>TE Connectivity(泰科)

Downloaded From Oneyac.com