THIS DRAWING IS UNPUBLISHED. RELEASED FOR PUBLICATION -,- .
© COPYRIGHT - By - ALL RIGHTS RESERVED.

LOC	DIST
FT	0

REVISIONS

P	LTR	DESCRIPTION	DATE	DWN	APVD
	W	REVISED PER ECO-12-012316	05JUL12	KH	MZ

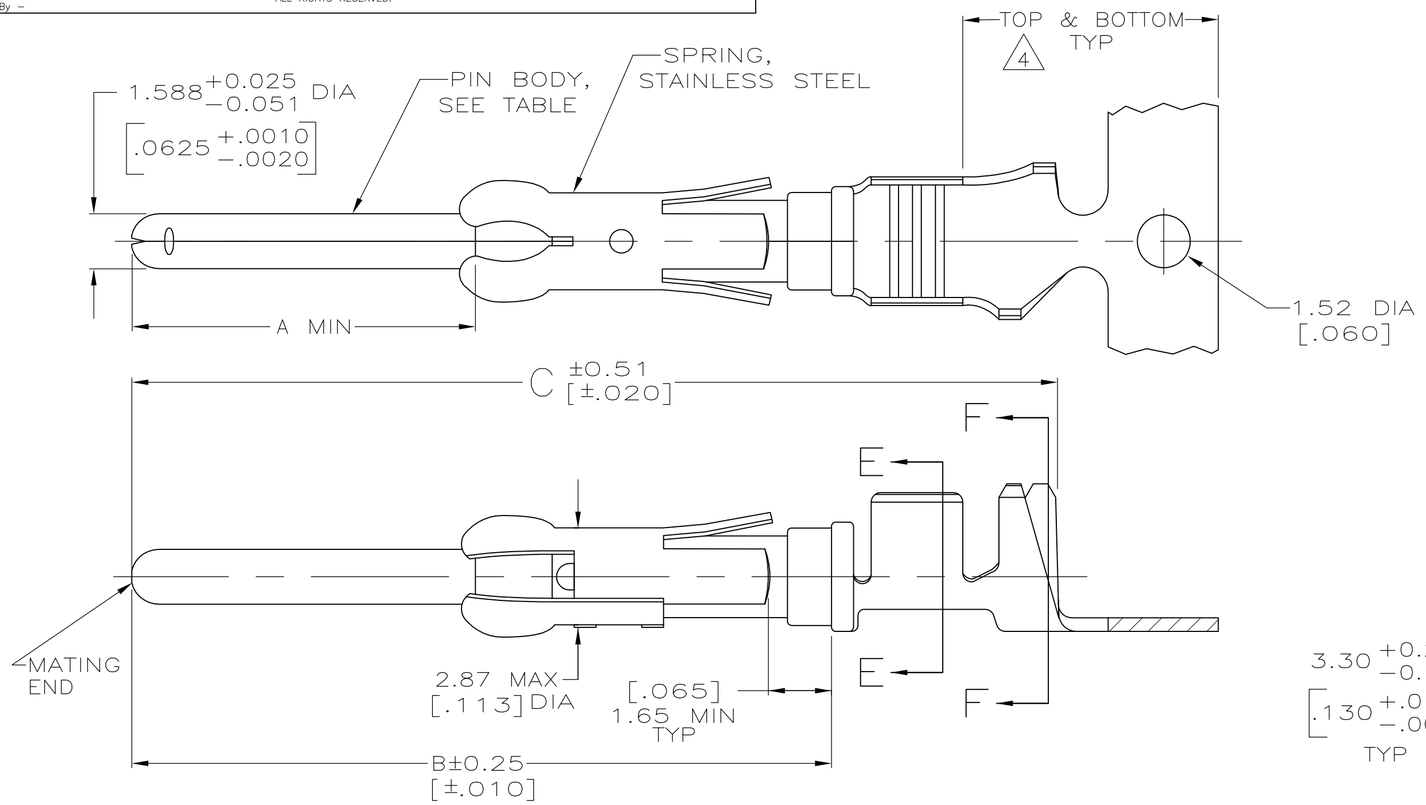

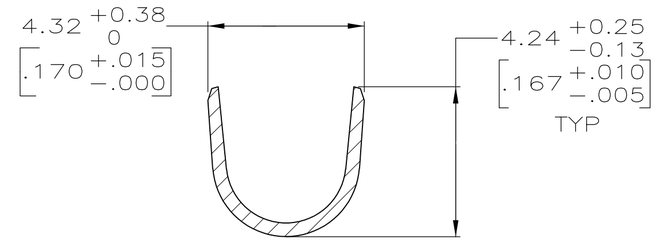

SECTION F—F

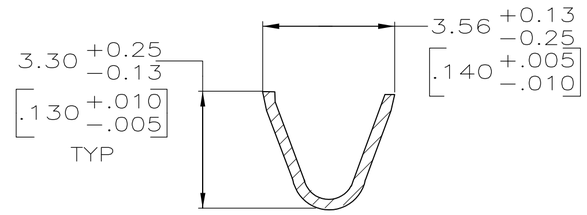

SECTION E—E

1. REELED FOR MINI-APPLICATOR.
2. 0.76μm [.000030] MIN PRECIOUS METAL PLATE ON MATING END FOR A LENGTH OF 5.08 [.200] MIN OVER 1.27μm [.000050] MIN NICKEL PLATE. GOLD FLASH ALL OVER. CONFORMS TO THE REQUIREMENTS OF TE CONNECTIVITY PRODUCT SPEC 108-10042, BASED ON EIA/ECA-364-1000.01A (CONTROLLED ENVIRONMENT APPLICATIONS).
3. 1.27μm [.000050] MIN TIN-LEAD PER MIL-T-10727 OVER 1.27μm [.000050] MIN NICKEL PER QQ-N-290.
4. GOLD PLATING NEED NOT APPEAR IN THIS AREA.
5. BRASS
6. PHOSPHOR BRONZE
7. WIRE RANGE 14-18 AWG.
8. INSULATION RANGE 2.79[.110]-3.81[.150] DIA.
9. 0.38μm [.000015] MIN GOLD PER MIL-G-45204 ON MATING END FOR A LENGTH OF 5.08 [.200] MIN, 1.27 μm [.000050] MIN TIN-LEAD PER MIL-T-10727 FOR A LENGTH OF 5.69 [.224] MIN ON OPPOSITE END,BOTH OVER 1.27μm [.000050] MIN NICKEL PER QQ-N-290 ON ENTIRE CONTACT.
10. OBSOLETE PART NUMBER.
11. 1.27μm [.000050] MIN TIN PER MIL-T-10727 OVER 1.27μm [.000050] MIN NICKEL PER Q-N-290.
12. COPPER NICKEL ALLOY.
13. 0.38μm [.000015] MIN GOLD PER MIL-G-45204 ON MATING END FOR A LENGTH OF 5.08 [.200] MIN. WITH GOLD FLASH ON THE REMAINDER, OVER 1.27μm [.000050] MIN NICKEL PER QQ-N-290.
14. PRELIMINARY - NOT FOR PRODUCTION.
15. OBSOLETE PARTS: OBSOLETE CIS STREAMLINING PER D.RENAUD/D.SINISI
16. 0.76μm [.000030] MIN PRECIOUS METAL PLATE ON MATING END FOR A LENGTH OF 5.08 [.200] MIN WITH 1.27μm [.000050] MIN MATTE TIN PLATE IN WIRE CRIMP AREA, BOTH OVER 1.27μm [.000050] MIN NICKEL PLATE. CONFORMS TO THE REQUIREMENTS OF TE CONNECTIVITY PRODUCT SPEC 108-10042, BASED ON EIA/ECA-364-1000.01A (CONTROLLED ENVIRONMENT APPLICATIONS).

	C	B	A	REELING	PIN BODY FINISH	PIN BODY	LOOSE PIECE REF	PART NO
	26.75[1.053]	20.24[.797]	9.91[.390]	1	13	12	-	14 1-66597-2
	26.75[1.053]	20.24[.797]	9.91[.390]	1	11	12	1-66602-0	1-66597-1
	26.75[1.053]	20.24[.797]	9.91[.390]	1	2	12	66602-9	1-66597-0
15 OBSOLETE	26.75[1.053]	20.24[.797]	9.91[.390]	1	11	6	-	~~66597-9~~
	26.75[1.053]	20.24[.797]	9.91[.390]	1	11	5	66602-8	66597-8
OBSOLETE	26.75[1.053]	20.24[.797]	9.91[.390]	1	9	5	~~66602-5~~	~~66597-7~~
OBSOLETE	30.43[1.198]	23.93[.942]	13.59[.535]	1	3	5	-	~~66597-6~~
OBSOLETE	26.75[1.053]	20.24[.797]	9.91[.390]	1	2	6	~~66602-4~~	66597-5
OBSOLETE	26.75[1.053]	20.24[.797]	9.91[.390]	1	3	6	~~66602-3~~	66597-4
	26.75[1.053]	20.24[.797]	9.91[.390]	1	16	5	66602-2	66597-2
	26.75[1.053]	20.24[.797]	9.91[.390]	1	3	5	66602-1	66597-1

THIS DRAWING IS A CONTROLLED DOCUMENT.

DIMENSIONS: mm [INCHES]

TOLERANCES UNLESS OTHERWISE SPECIFIED:
0 PLC ± -
1 PLC ± -
2 PLC ± 0.13[.005]
3 PLC ± -
4 PLC ± -
ANGLES ± -

MATERIAL: SEE CALLOUTS
FINISH: SEE TABLE

DWN R.SHIREY 7-22-91
CHK R.STONE 8-15-91
APVD J.WESTMAN 8-19-91
PRODUCT SPEC —
APPLICATION SPEC —
WEIGHT —

TE Connectivity

NAME: PIN ASSEMBLY, .062, TYPE III+

SIZE	CAGE CODE	DRAWING NO	RESTRICTED TO
A2	00779	C-66597	—

CUSTOMER DRAWING | SCALE 8:1 | SHEET 1 OF 1 | REV W

66597

1471-9 (3/11)

Downloaded From Oneyac.com

单击下面可查看定价，库存，交付和生命周期等信息

>>TE Connectivity(泰科)

Downloaded From Oneyac.com