DRAWING MADE IN AMERICAN PROJECTION

©1973 BY AMP INCORPORATED. ALL RIGHTS RESERVED. AMP PRODUCTS COVERED BY PATENTS AND/OR PATENTS PENDING.

Unpublished copy not to be reproduced nor published without written permission of AMP Incorporated

THIS PRODUCT DESIGNED AND BUILT BY AMP INCORPORATED. NO LICENSE TO USE THAT DESIGN IN MANUFACTURE, OR TO USE ANY ISSUED OR PENDING PATENTS WHICH ARE INVOLVED, IS IMPLIED.

REVISIONS

ZONE	LTR	DESCRIPTION	DATE	APPROVED
	A	UP-DATED ECN 8365 RGR	8-16-78	MG
	B	OBSOLETE -1 THRU -4 ECN S31.22	11-13-86	AB
	C	REV PER ECN S-3960	4-14 87	CFB
		REV PER ECN S-3968		

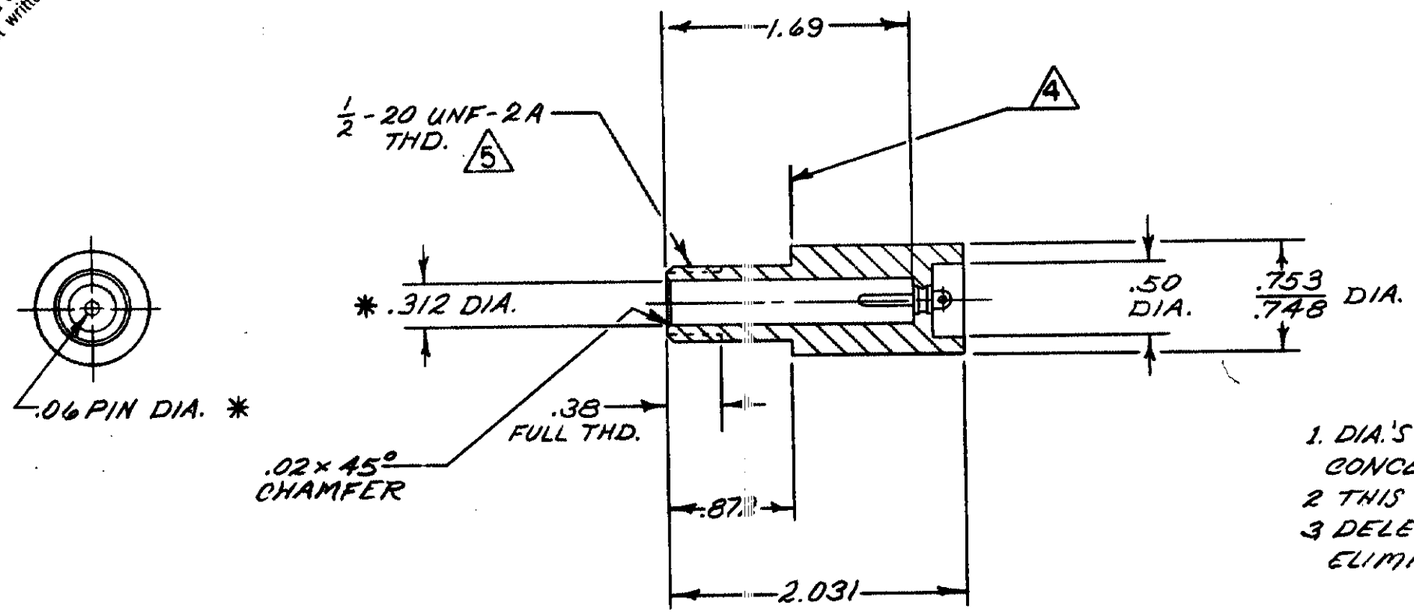

1. DIA.'S MARKED WITH ASTERISK * TO BE CONCENTRIC WITHIN .015 T.I.R.
2. THIS IS A HERMETICALLY SEALED RECEPTACLE
3. DELETE FIRST QUARTER TURN OF THREADS TO ELIMINATE FEATHER EDGE

4 PANEL/CHASSIS POTTING DEPTH DATUM

5 PER FEDERAL STANDARD H-28 3 WIRE METHOD. DIMENSION OVER WIRES TO BE: .497-.510.

QTY REQD -2	QTY REQD -1	ITEM NO.	DWG SIZE	PART OR IDENTIFYING NO.	NOMENCLATURE OR DESCRIPTION	SYMBOL
OBSOLETE				861395-6	SAME AS -4 EXCEPT FINISH RED	
				861395-5	SAME AS -3 EXCEPT FINISH RED	
				861395-4	SAME AS -2 EXCEPT NO HERMETIC SEAL BLACK	
				861395-3	SAME AS -1 EXCEPT NO HERMETIC SEAL BLACK	
				861395-2	TERMINAL CONTACT (GOLD PLATE) BLACK	
				861395-1	TERMINAL CONTACT (TIN PLATE) BLACK	

PARTS LIST

NEXT ASSY	FINAL ASSY	NEXT ASSY	USED ON
QTY REQD		APPLICATION	

UNLESS OTHERWISE SPECIFIED: DIMENSIONS ARE IN INCHES TOLERANCES .00 = ± .010 ANGLES ± .000 = ± .005

MATERIAL: MOLD GLASS EPOXY

FINISH: —

CONTRACT NO.

DR 3/27/73

CHK

APPD 3-29-73

APPD

DSGN APPD

OTHER APPD

AMP INCORPORATED
CAPITRON DIVISION
ELIZABETHTOWN, PENNSYLVANIA

NAME RECEPTACLE

SIZE B | CODE IDENT NO. 89110 | NUMBER 861395

SCALE ~ | WT | SHEET 1 of 1

CUSTOMER DRAWING

UP DATED

PRINT DIST L 137

AMP 1470 REV 4/69

Downloaded From Oneyac.com

单击下面可查看定价，库存，交付和生命周期等信息

>>TE Connectivity(泰科)

Downloaded From Oneyac.com