THIS DRAWING IS UNPUBLISHED. RELEASED FOR PUBLICATION -,- .
© COPYRIGHT - BY TYCO ELECTRONICS CORPORATION. ALL RIGHTS RESERVED.

LOC	DIST
AD	00

REVISIONS

P	LTR	DESCRIPTION	DATE	DWN	APVD
	E4	REVISED PER ECO-10-001916	02FEB2010	JY	SY
	F	ECR-10-018652	10SEP10	JS	MQW
	G	ECO-11-024491	13DEC11	SY	MQW
	H	ECR-12-010544	05DEC12	SY	AC

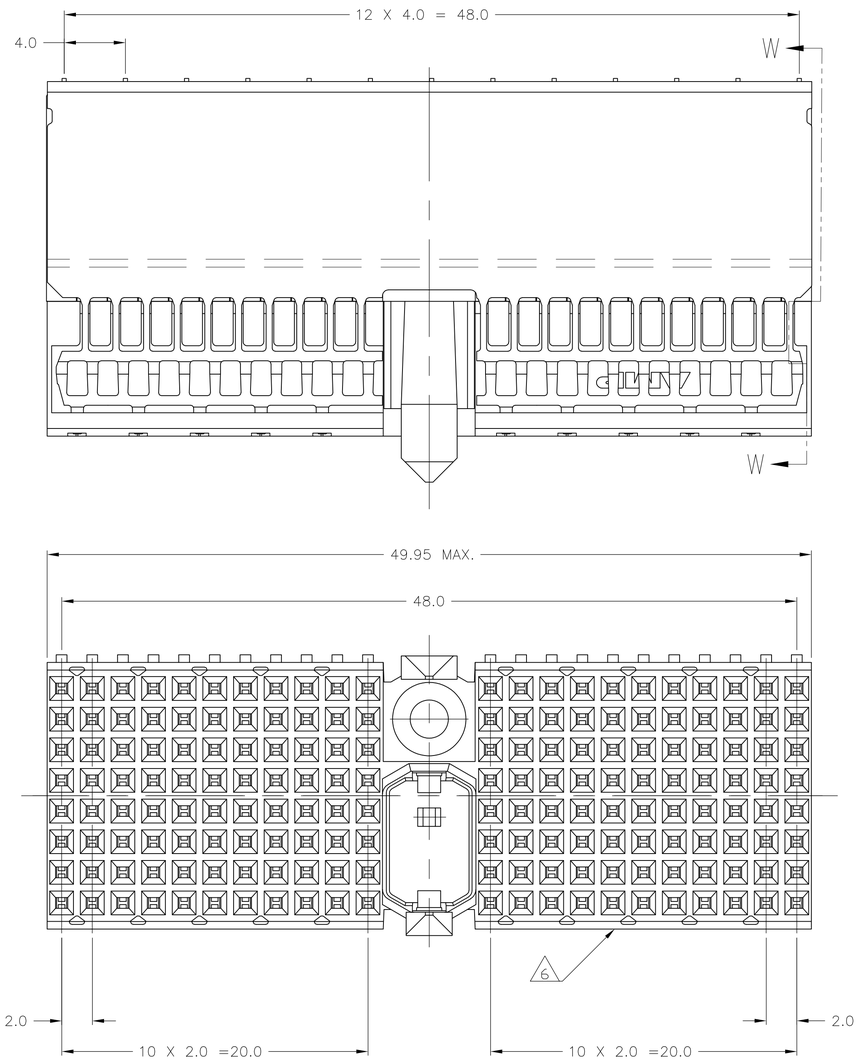

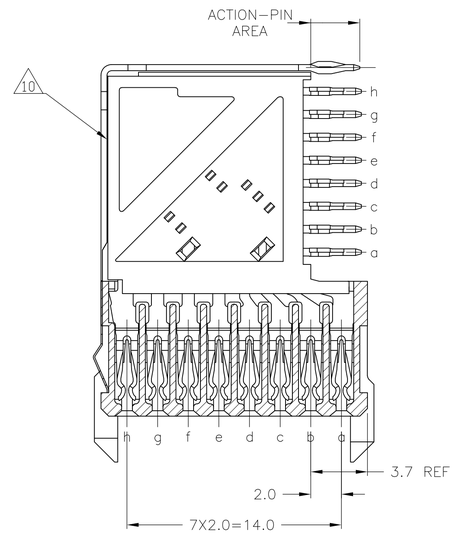

SECTION W-W

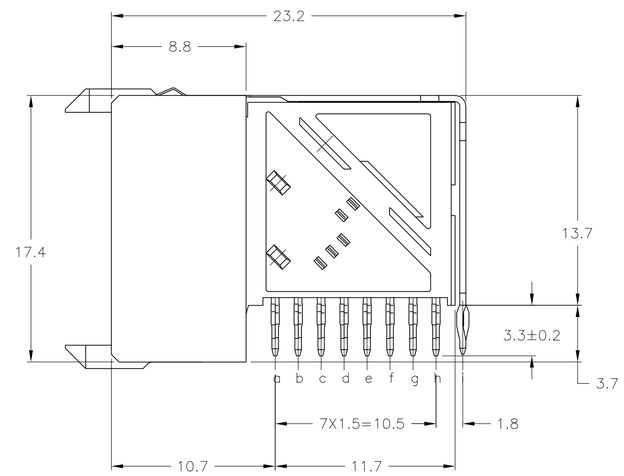

PLATED THRU HOLE PARAMETERS
REFERENCE APPLICATION SPECIFICATION

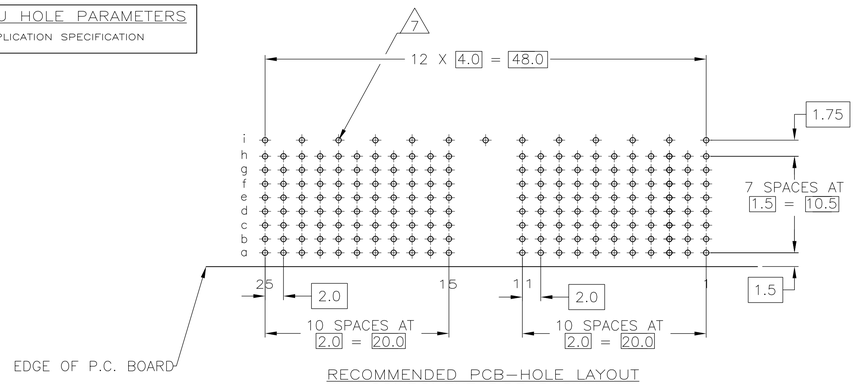

RECOMMENDED PCB-HOLE LAYOUT
COMPONENT SIDE SHOWN
SCALE 3:1

1. MATERIAL:
   CONTACT: PHOSPHOR BRONZE.
   HOUSING: GLASS-FILLED POLYESTER.
2. GENERAL PLATING SPECIFICATION: UNDERPLATING (ENTIRE CONTACT): 1.27µm MIN NICKEL AND ACTION PIN: 0.5µm MIN TIN/LEAD. FOR PLATING OF MATING SURFACES SEE APPLICABLE SPECIFICATION REFERENCE FOR EACH DASH NUMBER.
3. CONFORMS TO ALL TESTING ACCORDING TO IEC 61076-4-101 PERFORMANCE LEVEL 2.
4. CONNECTOR TESTED AND QUALIFIED AGAINST TELCORDIA GR-1217-CORE QUALITY LEVEL 3, CENTRAL OFFICE APPLICATIONS.
5. CONNECTOR TESTED AND QUALIFIED AGAINST TELCORDIA GR-1217-CORE QUALITY LEVEL 3, UNCONTROLLED ENVIROMENT APPLICATIONS.
6. CONNECTOR MARKED WITH PART NUMBER AND DATE CODE. ADDITIONAL CHARACTERS OR MARKINGS, AS WELL AS THE LOCATION OF THE MARKINGS, MAY BE ADDED FOR TRACEABILITY BASED UPON MANUFACTURERS DISCRETION.
7. PLATED-THROUGH HOLES AT 2x1.5mm GRID 176 TOTAL HOLES.
8. ROW "i" 13 PLATED THROUGH HOLES FOR UPPERSHIELD.
9. CONNECTOR & SHIELD LUBRICATED WITH BELCORE APPROVED LUBRICANT, TECHNICAL REFERENCE: TR-NWT-001217 ISSUE 1, SEP 1992.
10. SHIELD MOUNTED ON CONNECTOR WITH DOUBLE SIDED ADHESIVE TAPE OR ADHESIVE.
11. OBSOLETE PARTS: OBSOLETE CIS STREAMLINING PER D.RENAUD/D.SINISI
12. 0.76µm MIN GOLD PLATING AT MATING SURFACES.

		2 3 12	3-646486-0
11	OBSOLETE	2 5 9	~~1-646486-9~~
	OBSOLETE	2 4 9	~~646486-9~~
	OBSOLETE	2 3	~~646486-1~~
		FINISH	PART NUMBER

THIS DRAWING IS A CONTROLLED DOCUMENT.

DIMENSIONS: mm

TOLERANCES UNLESS OTHERWISE SPECIFIED:
0 PLC ± —
1 PLC ± 0.1
2 PLC ± —
3 PLC ± —
4 PLC ± —
ANGLES ± —
±0.2

MATERIAL 1

FINISH SEE TABLE

DWN B.CARBO 06DEC05
CHK G.SKIPPER 06DEC05
APVD G.SKIPPER 06DEC05
PRODUCT SPEC 108-1622
APPLICATION SPEC 114-19029
WEIGHT —

Tyco Electronics
Tyco Electronics Corporation
Harrisburg, PA 17105-3608

NAME
R/A RECEPTACLE ASSY, 176 POSN
Z-PACK 2mm HM, TYPE D
W/GROUND RETURN SHIELD

SIZE	CAGE CODE	DRAWING NO	RESTRICTED TO
A1	00779	C-646486	—

CUSTOMER DRAWING | SCALE 5:1 | SHEET 1 OF 1 | REV H

Downloaded From Oneyac.com

单击下面可查看定价，库存，交付和生命周期等信息

>>TE Connectivity(泰科)

Downloaded From Oneyac.com