THIS DRAWING IS UNPUBLISHED. RELEASED FOR PUBLICATION -,- .
© COPYRIGHT - TE Connectivity Ltd. ALL RIGHTS RESERVED.

REVISIONS					
P	LTR	DESCRIPTION	DATE	DWN	APVD
	C	REVISED PER ECO-17-015513	20DEC2017	PHM	CT

1. CONNECTOR DIMENSIONS ARE PER ARINC 600 SPECIFICATION
2. DUST COVER, QTY=2, (NOT SHOWN) INSTALLED FOR SHIPPING.
3. KEYING SHOWN IN POSITION "01" FOR REFERENCE ONLY.
   SEE TABLE FOR KEYING POSITION.
   FOR POSITION "00" KEYING SHIPPED UNASSEMBLED.
4. SEALANT APPLIED AROUND INSERTS.
5. CONTACTS ARE PACKAGED IN A SEPARATE CONTAINER (1996465-2 ONLY.)

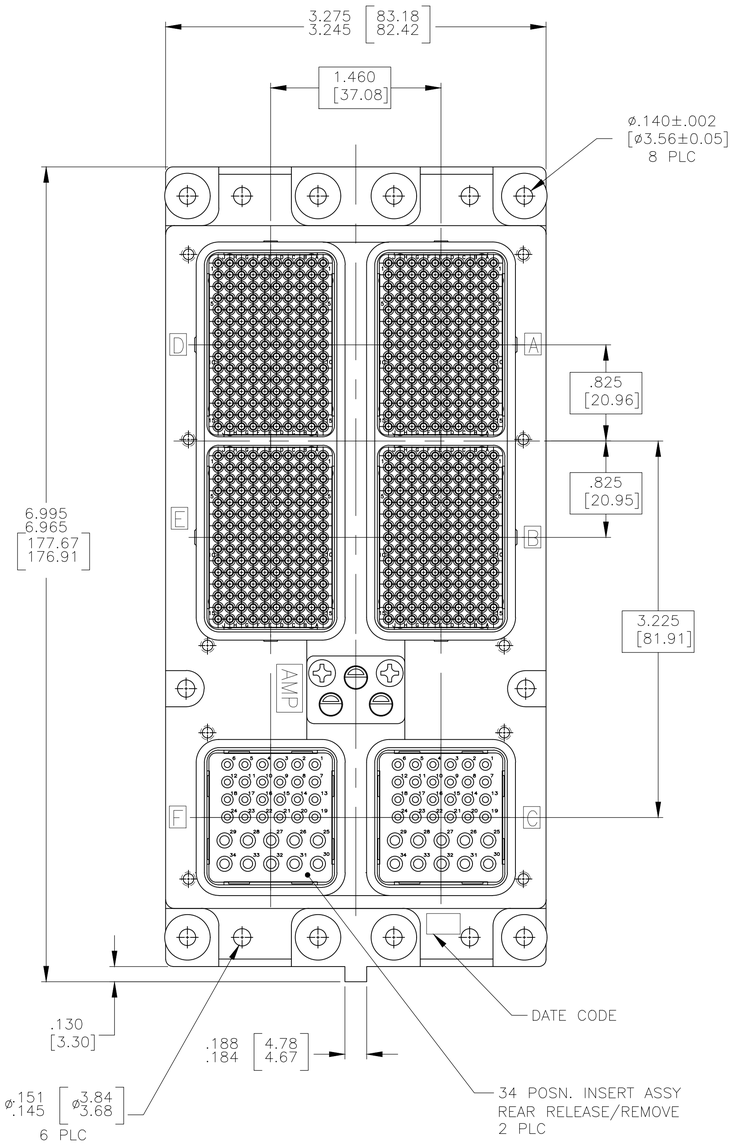

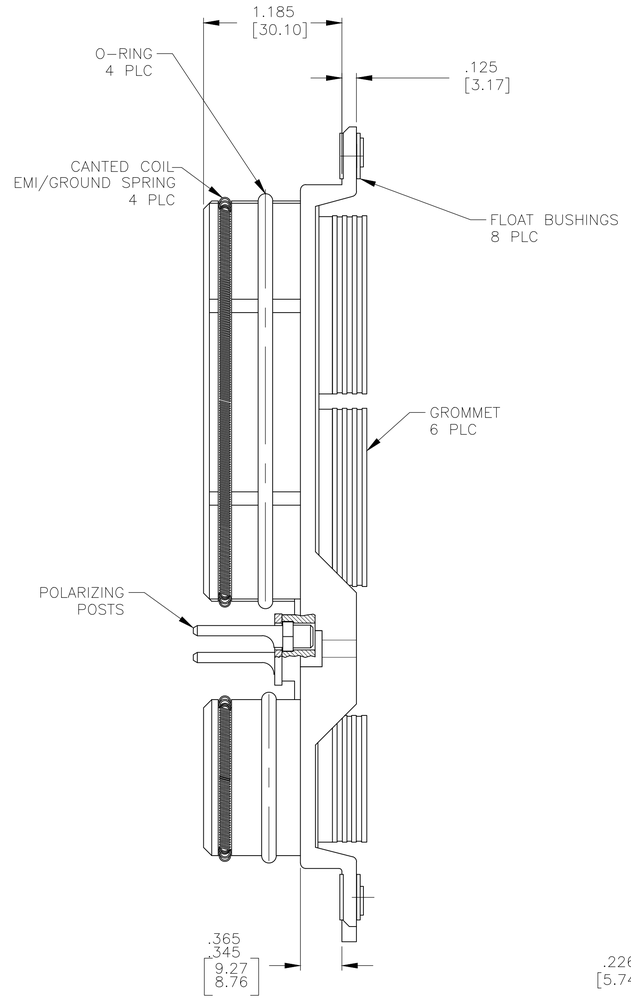

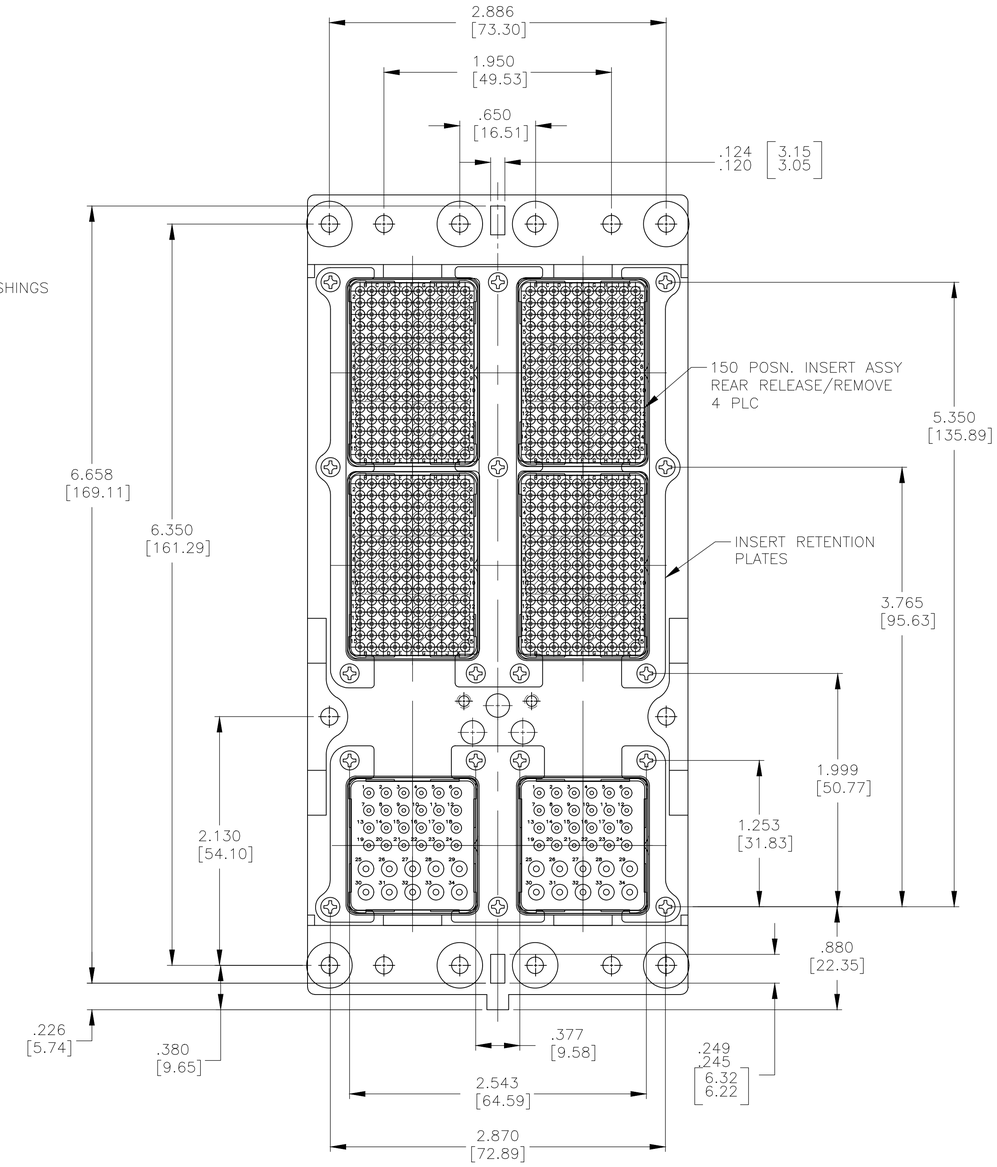

COMPONENT	MATERIAL	FINISH
SHELL	DIE CAST ALUMINUM PER ASTM-B-85	ELECTROLESS NICKEL PER MIL-C-26074, CLASS 4, GRADE B
INSERT RETENTION PLATES	ALUMINUM ALLOY PER ASTM-B-209	ELECTROLESS NICKEL PER MIL-C-26074, CLASS 4, GRADE B
SCREWS	STEEL OR STAINLESS STEEL	PASSIVATED
POLARIZING POSTS	ZINC ALLOY PER ASTM-B-86	ELECTROLESS NICKEL PER MIL-C-26074, CLASS 4, GRADE B
POLARIZING POST RETAINING PLATE	ALUMINUM ALLOY PER ASTM-B-209	BLUE ANODIZED PER MIL-A-8625
ALL INSERTS	THERMOSET	-
O-RING	FLUOROSILICONE	-
COIL SPRING	BERYLLIUM COPPER	NICKEL PLATED

KEYING POSITION	MODULE A, B, D & E 208262-3 (SZ 22 CRIMP PIN CONTACT (QTY = 150 PER INSERT) MODULE C 208267-2 (SZ 20 CRIMP SKT CONTACT; QTY=24) 208270-2 (SZ 16 CRIMP SKT CONTACT; QTY=10) MODULE F 208267-2 (SZ 20 CRIMP SKT CONTACT; QTY=24) 208270-2 (SZ 16 CRIMP SKT CONTACT; QTY=10)	PART NUMBER
01	1996465-2	
01	CONTACTS NOT INCLUDED	1996465-1
	CONTACTS INCLUDED AND NOT INSTALLED	

THIS DRAWING IS A CONTROLLED DOCUMENT.

DIMENSIONS: INCHES

TOLERANCES UNLESS OTHERWISE SPECIFIED:
0 PLC ± -
1 PLC ± -
2 PLC ± -
3 PLC ± .005 [0.13]
4 PLC ± -
ANGLES ± -

MATERIAL: SEE TABLE
FINISH: SEE TABLE

DWN C.C.THOMAS 10-18-07
CHK K.THACKSTON 10-18-07
APVD K.THACKSTON 10-18-07
PRODUCT SPEC —
APPLICATION SPEC —
WEIGHT
CUSTOMER DRAWING

TE Connectivity

NAME: PLUG ASSY,SIZE 3,ARINC 600 (150/150/34/150/150/34) WITH FLOAT BUSHINGS

SIZE	CAGE CODE	DRAWING NO	RESTRICTED TO
A1	00779	C-1996465	—

SCALE 1:1 SHEET 1 OF 1 REV C

4805 (1/15)

Downloaded From Oneyac.com

单击下面可查看定价，库存，交付和生命周期等信息

>>TE Connectivity(泰科)

Downloaded From Oneyac.com