-1 本図

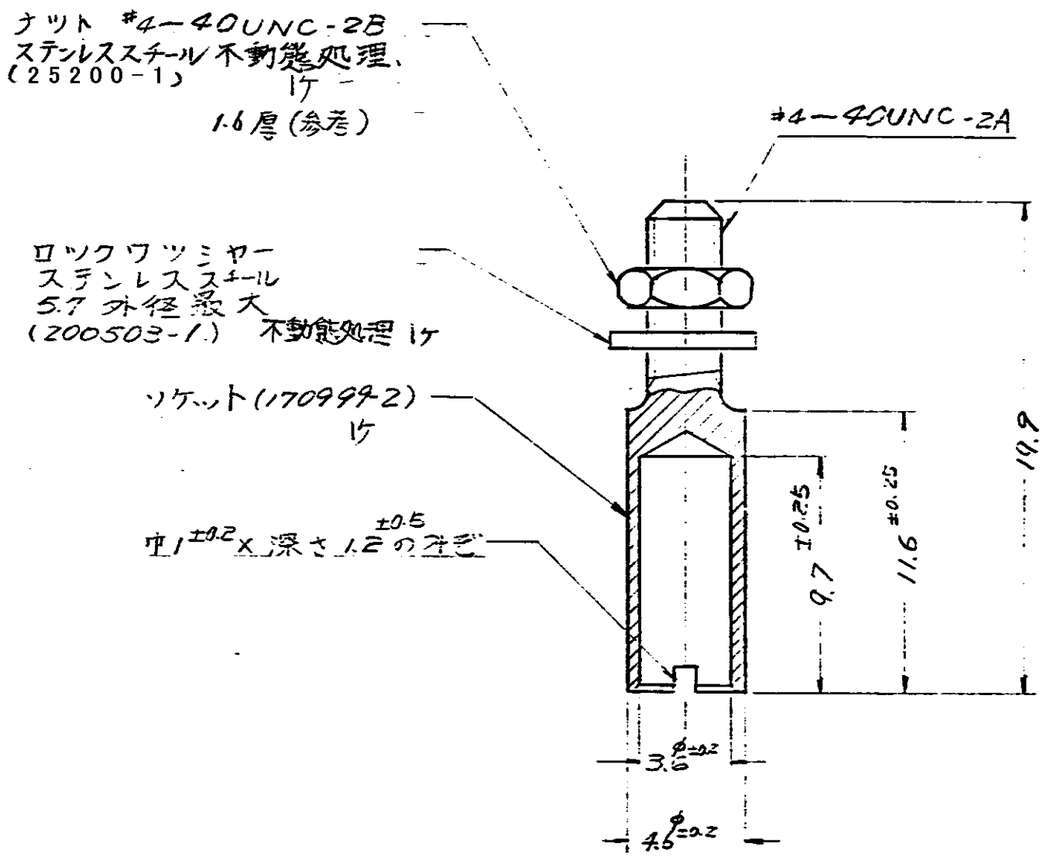

171081-1	黄銅	錫めっき	類似200590-4
型番	材料	仕上	備考

番号 NUMBER	品名 NAME	備考 REMARKS	ITEM NO.

RQ'D (REQUIRED PER ASSEMBLY)

© 1972 BY AMP Japan, Ltd. ALL RIGHTS RESERVED. AMP PRODUCTS COVERED BY PATENTS AND/OR PATENTS PENDING

参考図 (CUSTOMER COPY REFERENCE ONLY)

MATERIAL: 表参照
WIRE RANGE: — mm — AWG
FINISH: 表参照
INSULATION DIA.: — mm — IN
DR. 7/27/71
CHK. 7/30/71
DE.
APP.
TOLERANCE EXCEPT AS NOTED
SCALE 4-1

tyco Electronics
Tyco Electronics AMP K.K
Kawasaki, Japan

CLASS
TYPE

LOC J SITE 3 SR NO. C-171081 REV E

DESCRIPTION: コーナーガイドソケット

E	REVISED FJD0-0320-04	Y.Y	D.M	13SEP '04
D	ECN J1-3956	YA		7/10
C	REVISED (RE. DWG)			
B	REVISED TOLERANCE (RE. DWG)			
A	RETIRED (RE. DWG)			
0	RELEASED			
REVISION RECORD		DR.	CHK.	DATE

C-171081

DIMENSIONS IN MM. DO NOT SCALE PRINT

AMP J 030-2

Downloaded From Oneyac.com

单击下面可查看定价，库存，交付和生命周期等信息

>>TE Connectivity(泰科)

Downloaded From Oneyac.com