THIS DRAWING IS UNPUBLISHED. RELEASED FOR PUBLICATION -,- .
© COPYRIGHT - By - ALL RIGHTS RESERVED.

REVISIONS

P	LTR	DESCRIPTION	DATE	DWN	APVD
	U	REVISED PER ECO-16-009792	2JUL2016	NK	MZ
	V	REVISED PER ECO-17-004657	06APR2017	BDA	MZ

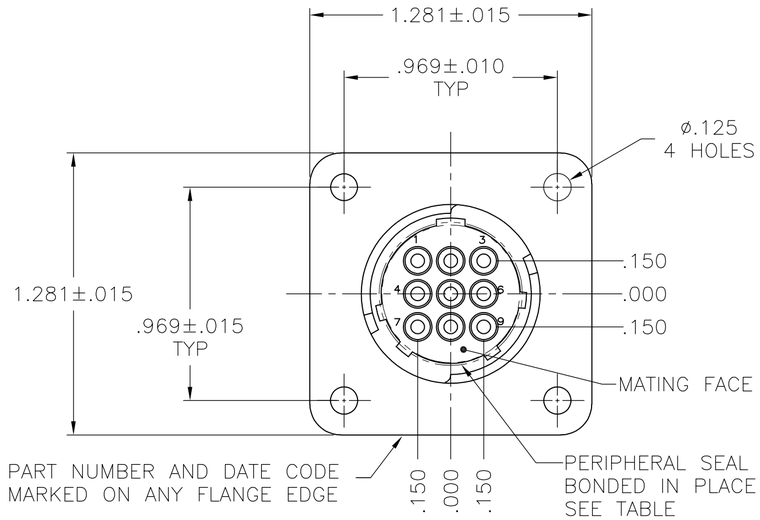

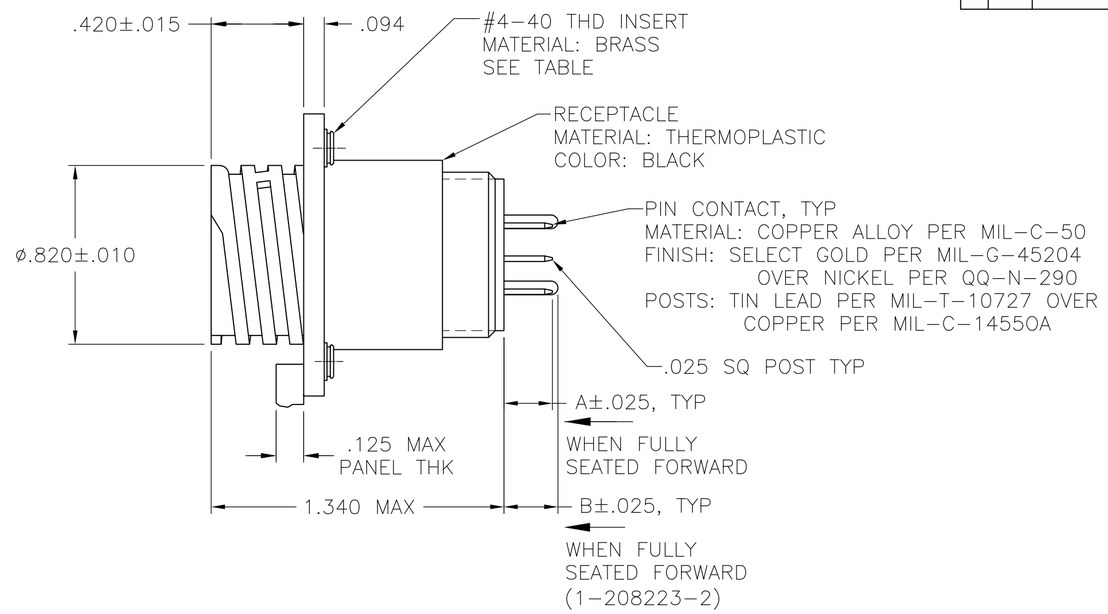

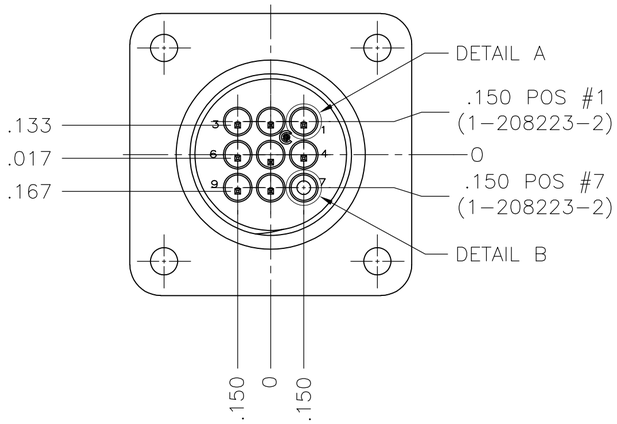

DETAIL A

DETAIL B
1-208223-2
POSITIONS 1 & 7

1. 1-66460-0 WILL BE SELECTIVELY LOADED INTO POSITIONS 2, 4, 6, 7, 9 AND 66464-3 WILL BE LOADED INTO POSITIONS 1, 3, 5, 8 OF THE HOUSING.
2. LOAD ALL POSITIONS EXCEPT POSITION NUMBER 4.
3. TIN PLATED CONTACTS.
4. 194264-1 LOADED INTO POSITIONS 1 & 7.
5. OBSOLETE PARTS: OBSOLETE CIS STREAMLINING PER D.RENAUD/D.SINISI.

		B	A	PERIPHERAL SEAL	THREADED INSERTS	PART NUMBER
	OBSOLETE	~~—~~	~~.130~~	~~YES~~	~~YES~~	~~1-208223-3~~
4	OBSOLETE	~~.245~~	~~.220~~	~~NO~~	~~YES~~	~~1-208223-2~~
3		—	.220	YES	YES	1-208223-1
3		—	.220	NO	YES	1-208223-0
3		—	.220	NO	NO	208223-9
	OBSOLETE	~~—~~	~~.220~~	~~YES~~	~~NO~~	~~208223-8~~
2	OBSOLETE	~~—~~	~~.220~~	~~NO~~	~~NO~~	~~208223-7~~
	OBSOLETE	~~—~~	~~.618~~	~~NO~~	~~YES~~	~~208223-6~~
5	OBSOLETE	~~—~~	~~.220~~	~~YES~~	~~YES~~	~~208223-5~~
1	OBSOLETE	~~—~~	~~.220~~	~~NO~~	~~NO~~	~~208223-4~~
		—	.220	NO	YES	208223-3
	OBSOLETE	~~—~~	~~.429~~	~~NO~~	~~NO~~	~~208223-2~~
		—	.220	NO	NO	208223-1

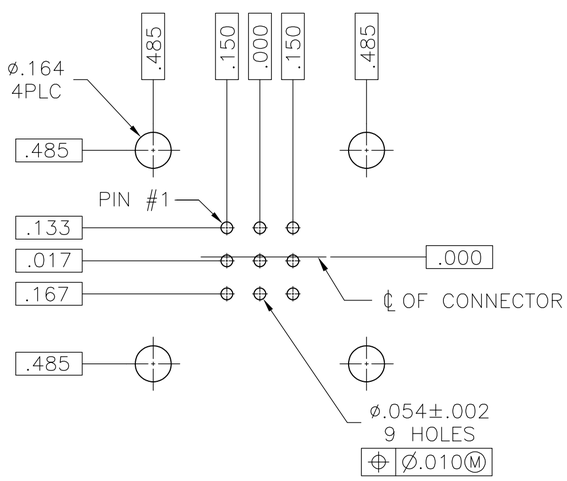

RECOMMENDED P.C. BOARD LAYOUT

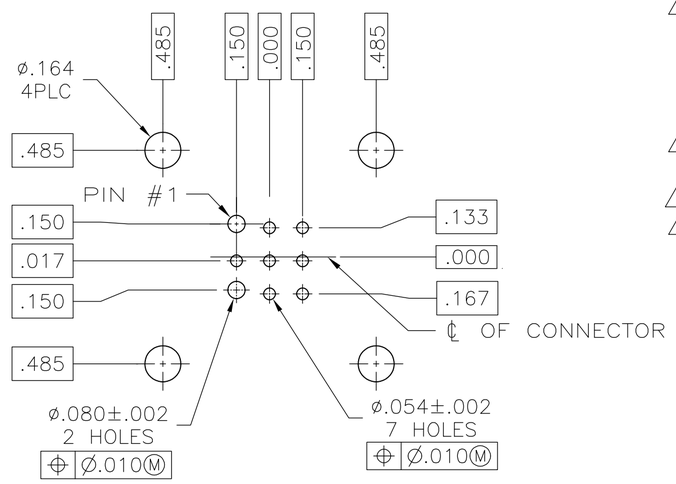

RECOMMENDED P.C. BOARD LAYOUT
(1-208223-2 ONLY)

THIS DRAWING IS A CONTROLLED DOCUMENT.

DIMENSIONS: INCHES

TOLERANCES UNLESS OTHERWISE SPECIFIED:
0 PLC ± -
1 PLC ± -
2 PLC ± -
3 PLC ± .005
4 PLC ± -
ANGLES ± -

MATERIAL: SEE CALLOUT
FINISH: SEE CALLOUT

DWN R.LEE BG 6-22-91
CHK W.G.LENKER 4-14-92
APVD —
PRODUCT SPEC 108-10024
APPLICATION SPEC —
WEIGHT —

TE Connectivity

NAME: RECEPTACLE ASSEMBLY, POSTED, STD SEX, SERIES 1, 13-9, CPC

SIZE A2 | CAGE CODE 00779 | DRAWING NO C-208223 | RESTRICTED TO —

CUSTOMER DRAWING | SCALE 2:1 | SHEET 1 OF 1 | REV V

208223

1471-9 (1/15)

Downloaded From Oneyac.com

单击下面可查看定价，库存，交付和生命周期等信息

>>TE Connectivity(泰科)

Downloaded From Oneyac.com