© 2020 TE Connectivity. All Rights Reserved.

REVISIONS					
P	LTR	DESCRIPTION	DATE	DWN	APVD
	C	REVISED PER PER ECO-14-018192	27FEB2020	IT	SH

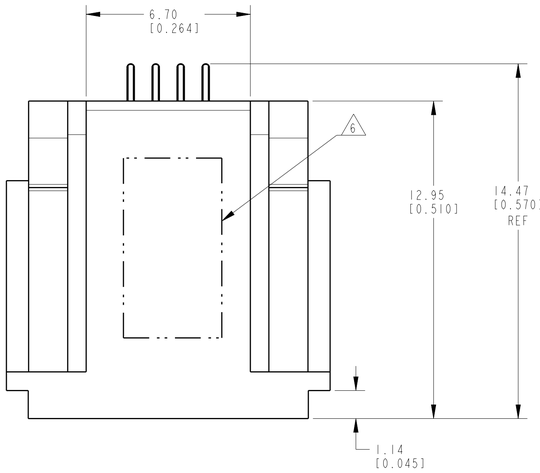

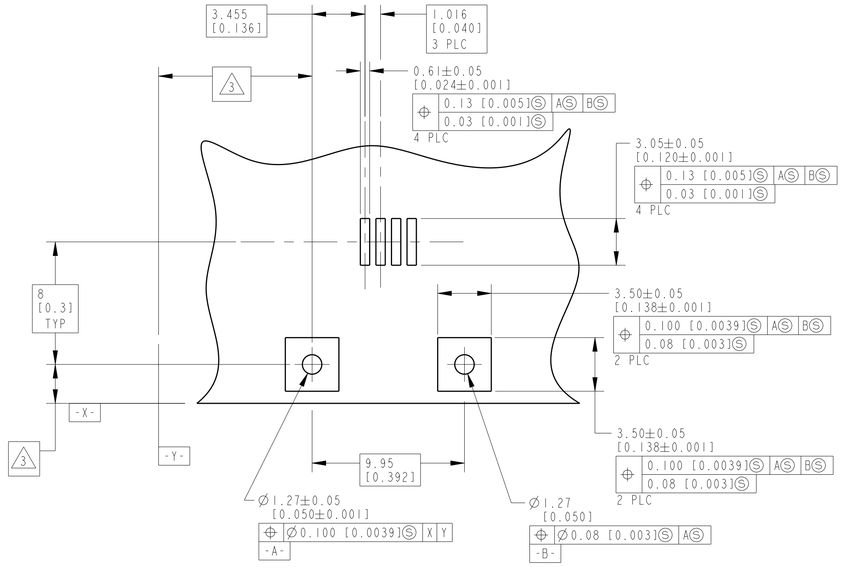

RECOMMENDED PRINTED
CIRCUIT BOARD LAYOUT
COMPONENT SIDE
SCALE 5:1

1. MATERIAL:
HOUSING - HIGH TEMPERATURE THERMOPLASTIC,PA 9T COLOR - BLACK.
TERMINALS - 0.3[.012] THICK COPPER ALLOY PLATED WITH
1.27µ[.000050] MINIMUM GOLD IN LOCALIZED GOLD PLATE AREA,
2.5 µm[.000100] MINIMUM MATTE TIN ON TERMINATION END, BOTH OVER
1.27µm[.000050] MINIMUM NICKEL OVER ENTIRE TERMINAL.
BOARDLOCK - PHOS BRONZE, 1/2 HARD, 3.81µm[.000150]
MINIMUM MATTE TIN OVER 1.27µm[.000050] MINIMUM NICKEL ON TERMINAL END.

2. JACK CAVITY CONFORMS TO FCC 47 RULES AND REGULATIONS,
PART 68 SUBPART F.

3. DATUM ESTABLISHED BY CUSTOMER.

4. PACKAGING TAPE AND REEL: (PER EIA 481 SPEC)
32mm WIDE TAPE
24mm POCKET PITCH
560mm REEL DIA
600 PIECES PER REEL

5. CONNECTOR SHOULD BE POSITIONED THROUGH PANEL
CUTOUT AS SHOWN TO SUPPORT TOP OF MODULAR JACK FOR
STRAIN RELIEF

6. MANUFACTURING DATE CODE LOCATED APPROXIMATELY AS SHOWN.
FIRST 2 DIGITS ARE YEAR, SECOND 2 DIGITS ARE WORK WEEK, AND LAST
DIGIT IS THE DAY OF THE WEEK

7. PACKAGING TAPE AND REEL: 32mm WIDE TAPE
24mm POCKET PITCH
330mm REEL DIA
200 PIECES/REEL
REFER 107-64184

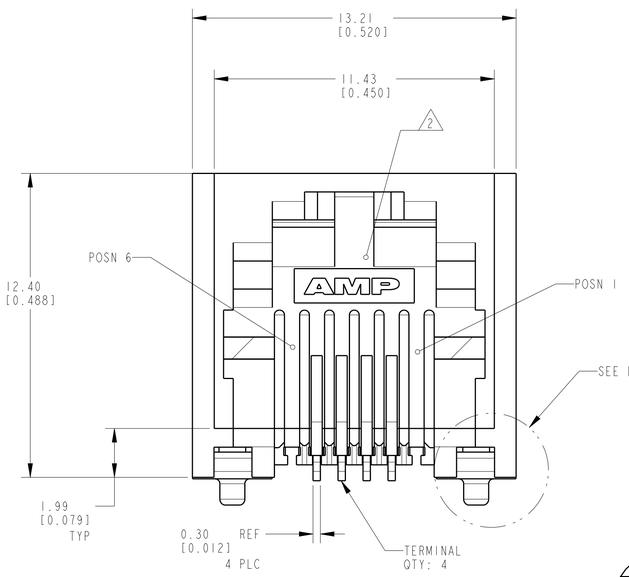

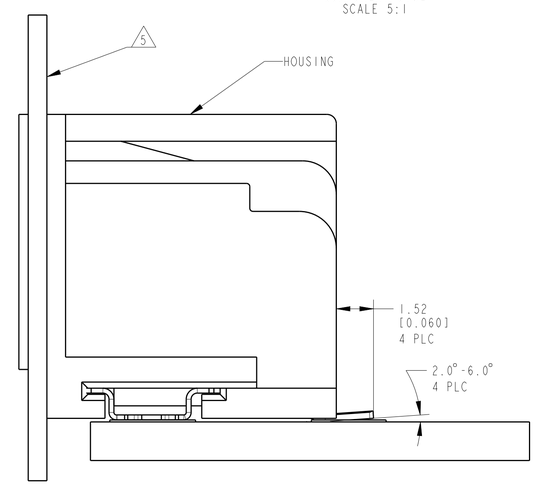

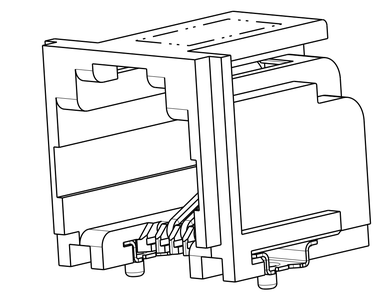

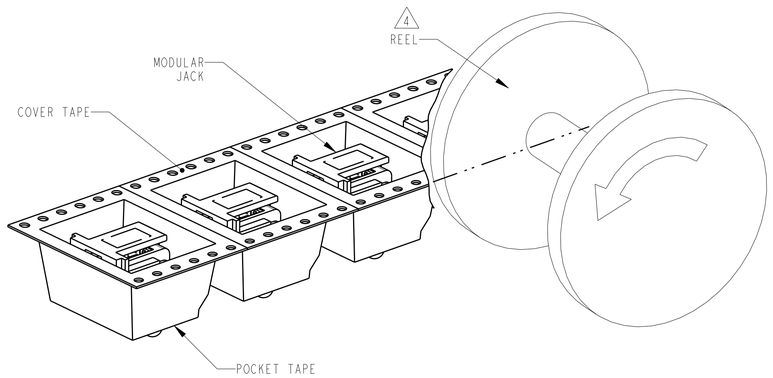

1551040-1 AS SHOWN

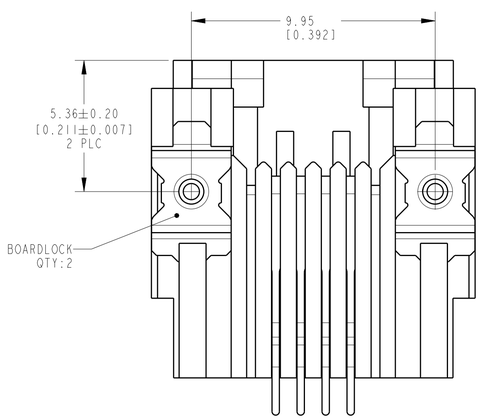

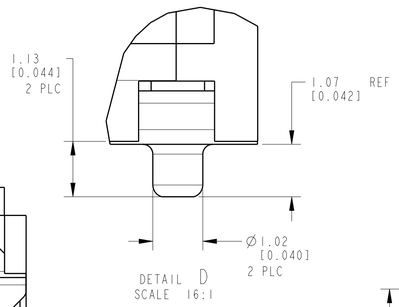

DETAIL D
SCALE 16:1

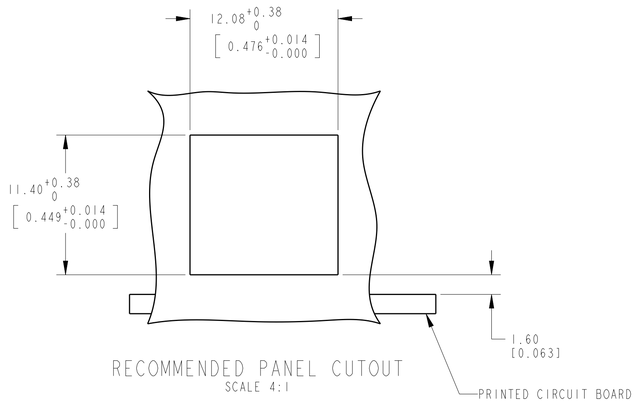

RECOMMENDED PANEL CUTOUT
SCALE 4:1

OBSOLETE

7	1551040-2
4	1551040-1
PACKAGING	P.N

THIS DRAWING IS A CONTROLLED DOCUMENT.	DWN PREMJITH 24DEC08	TE Connectivity	
DIMENSIONS: mm[INCHES]	CHK D.CAMPSCHROER 24DEC08		
TOLERANCES UNLESS OTHERWISE SPECIFIED: 0 PLC ±- 1 PLC ±- 2 PLC ±0.13[.005] 3 PLC ±- 4 PLC ±- ANGLES ±1	APVD T.d BOER 24DEC08	NAME MODULAR JACK ASSEMBLY, 1 PORT, 6/4 POSN, SURFACE MOUNT, RIGHT ANGLE, WITH INWARD BOARDLOCKS	
	PRODUCT SPEC 108-1689		
	APPLICATION SPEC 114-6040	SIZE A1 / CAGE CODE 00779 / DRAWING NO C-1551040	RESTRICTED TO
MATERIAL SEE NOTE 1	WEIGHT -		
FINISH SEE NOTE 1	RESTRICTED CUSTOMER	SCALE 8:1 / SHEET 1 OF 1	REV C

4805 (3/13)

Downloaded From Oneyac.com

单击下面可查看定价，库存，交付和生命周期等信息

>>TE Connectivity(泰科)

Downloaded From Oneyac.com