DRAWING MADE IN THIRD ANGLE PROJECTION

© COPYRIGHT 1977 BY AMP INCORPORATED, HARRISBURG, PA. ALL INTERNATIONAL RIGHTS RESERVED. AMP INCORPORATED PRODUCTS COVERED BY U. S. AND FOREIGN PATENTS AND OR PATENTS PENDING.

LOC	DIST
L	37

REVISIONS

P	F	ZONE	LTR	DESCRIPTION		DATE	APPROVED
			A	REVISED NOTE 5 ECN 8188	XH	11-17-77	
	/		B	ADDED MARKING AREA & .125 MAX. ECN 8188		7/7/77	
	/		C	REVISED PER ECO-09-010905	CT	18MAY09	DE

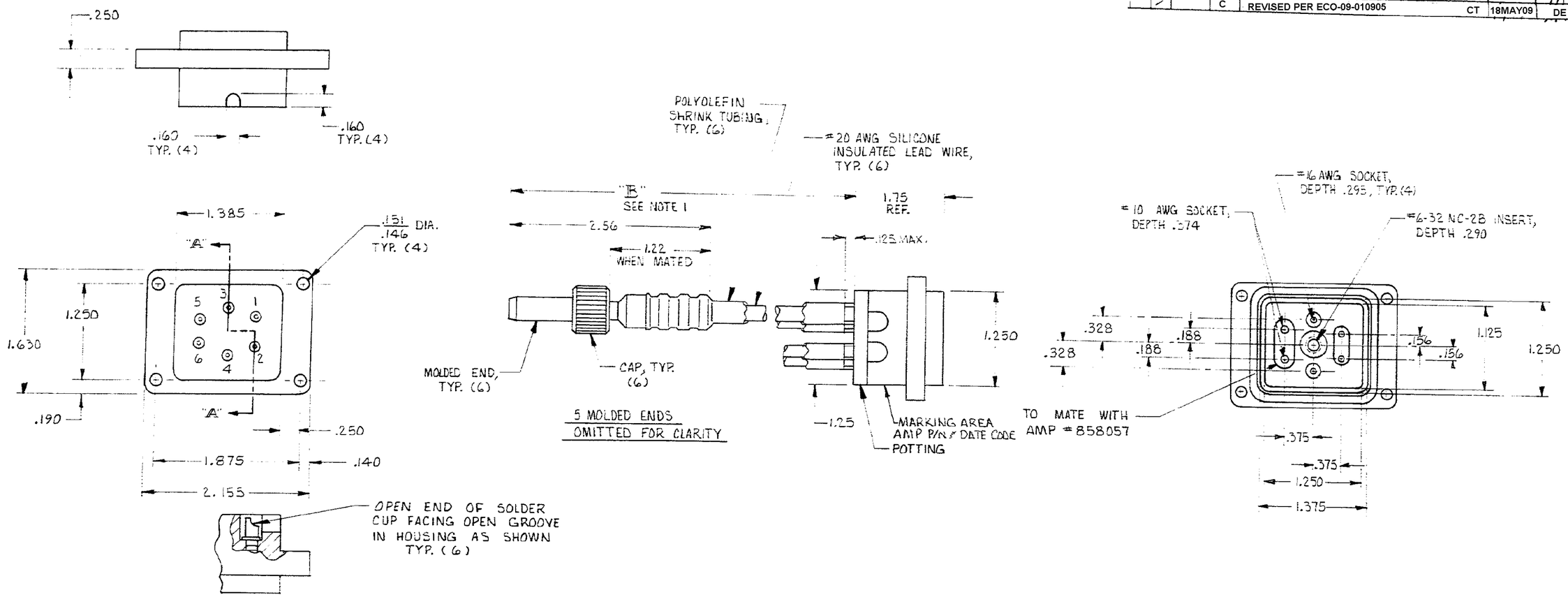

NOTE:

1. TOLERANCE: UP TO 24" = ±.25
   24" & UP = ±2%
2. CUSTOMER MARKING, WHEN REQ'D: SEE CUSTOMERS LATEST SPEC. ON WHERE AND WHAT TO MARK. ALL MARKING TO BE IN BLACK.
3. POTTING COMPOUND: RTV-21 PER MIL-D-46838.
4. RECEP. MAT'L: MOLDED GLASS EPOXY PER MIL-M-24325.
5. HI-POT VOLTAGE: MATED CONDITION
   ALL TERMINALS TO SHELL: 17 KVDC.
6. **Six position receptacle is not hermetically sealed**

PART NO.	"B" DIM.
863461-1	36.00"

PART NO

NEXT ASSY	FINAL ASSY	NEXT ASSY	USED ON
QTY REQD		APPLICATION	

UNLESS OTHERWISE SPECIFIED DIMENSIONS ARE IN INCHES.
TOLERANCES:
.00 ±.02 .000 ±.005
ANGLES ±

MATERIAL ~

FINISH ~

CONTRACT NO

DR DICK STONE 2-4-77

CHK

APPD M. Fordham 2/4/77

APPD

DSGN APPD

OTHER APPD

Tyco Electronics — Tyco Electronics, Harrisburg, PA 17105-3608

NAME: RECEPTACLE & LEAD ASSEMBLY

SIZE	CODE IDENT NO	DRAWING NO	
C	00779	863461	LGH

SCALE ~ SHEET 1 OF 1

REV C

AMP 1471-5 REV 10-73

CUSTOMER DRAWING

Downloaded From Oneyac.com

单击下面可查看定价，库存，交付和生命周期等信息

>>TE Connectivity(泰科)

Downloaded From Oneyac.com