THIS DRAWING IS UNPUBLISHED. RELEASED FOR PUBLICATION – ,9–28–92
© COPYRIGHT – By – ALL RIGHTS RESERVED.

LOC	DIST
CM	54

REVISIONS

P	LTR	DESCRIPTION	DATE	DWN	APVD
	C	REVISED PER ECO–13–003622	17JUN13	KH	TM

1. UNIT ACCEPTS 1.14 [.045] SQUARE OR ROUND POST.
2. UNIT ACCEPTS STANDARD SL–156 CONTACTS.
3. UNIT ACCEPTS KEYING PLUG 640254–1 AND KEYING PIN 640255–1.
4. CIRCUIT I.D. NUMBER(S),TO BE LOCATED SEQUENTIALLY AS SHOWN.
5. DIMENSIONS IN BRACKETS ARE IN INCHES.
6. OPTIONAL CONSTRUCTION (BOTH CORNERS) UP TO 1.27 [.050].
7. REFERENCE: THIS PART IS THE SAME AS 640250–8,EXCEPT FOR OPTIONAL CIRCUIT I.D. MARKING IS NOT ALLOWED.

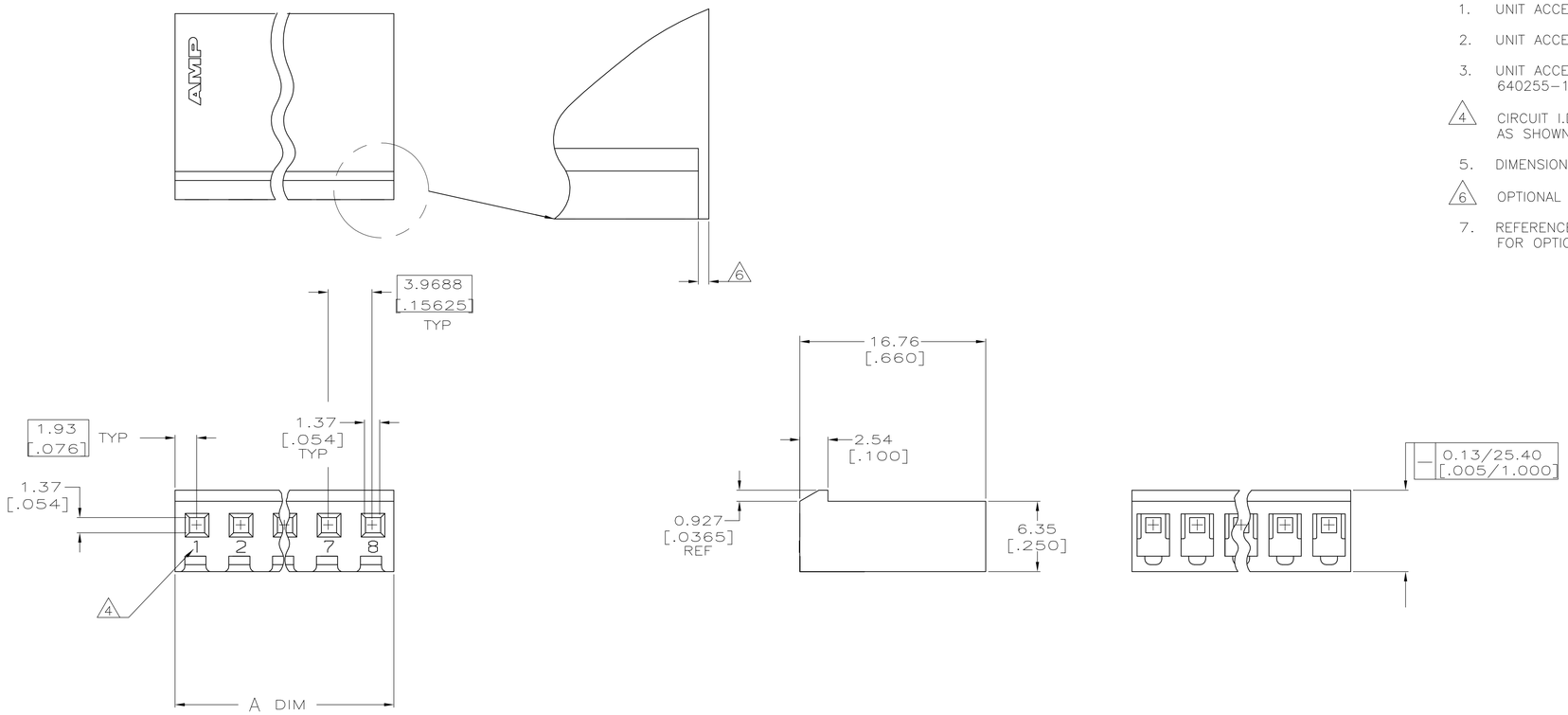

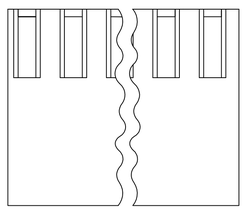

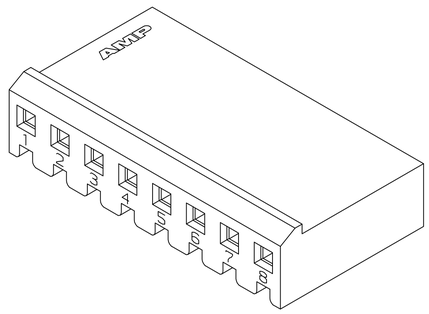

3–DIMENSIONAL MODEL
NTS

A ±0.25 [.010]	NO. OF CIRCUITS	PART NO
31.65 [1.246]	8	770696–8

THIS DRAWING IS A CONTROLLED DOCUMENT.

DIMENSIONS: mm [INCHES]

TOLERANCES UNLESS OTHERWISE SPECIFIED:
0 PLC ± –
1 PLC ± –
2 PLC ± –
3 PLC ± 0.13 [.005]
4 PLC ± –
ANGLES ± 0°30'

MATERIAL: NYLON,UL 94V–0
FINISH: –

DWN R. LEWIS 7–31–92
CHK R. SWING 7–31–92
APVD E. BEILES 9–28–92
PRODUCT SPEC —
APPLICATION SPEC —
WEIGHT —

TE Connectivity

NAME: HOUSING WITH LOCKING RAMP, SL–156

SIZE	CAGE CODE	DRAWING NO	RESTRICTED TO
A1	00779	C–770696	—

CUSTOMER DRAWING | SCALE 4:1 | SHEET 1 OF 1 | REV C

"A/C BUSINESS GROUP" 3323 177–34 LARRY H. SMITH

Downloaded From Oneyac.com

单击下面可查看定价，库存，交付和生命周期等信息

>>TE Connectivity(泰科)

Downloaded From Oneyac.com