THIS DRAWING IS UNPUBLISHED. RELEASED FOR PUBLICATION -
© COPYRIGHT - BY - ALL RIGHTS RESERVED.

Project No CA05-007 | LOC ES | DIST -

REVISIONS

P	LTR	DESCRIPTION	DATE	DWN	APVD
	0	NEW RELEASE	25OCT2005	A.Z	K.O
	A	REVISED ECO-13-010505	10APR13	J.L	I.Y
	A1	OBSOLETE PNs	01MAR2019	V.T	I.Y
	A2	ADD NEW PNs ECR-19-006325	25MAY2019	N.S	I.Y

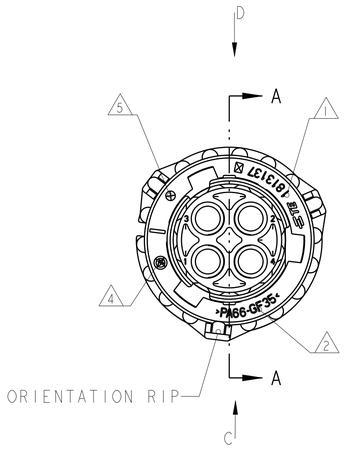

COUPLING RING IN PRE-LOCKED POSITION
(FITTING POSITION WITH PIN HOUSING)

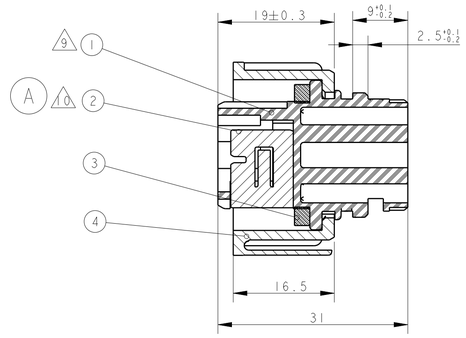

SECTION A-A

SECOND LOCKING DEVICE
IN PRE-LOCKED POSITION

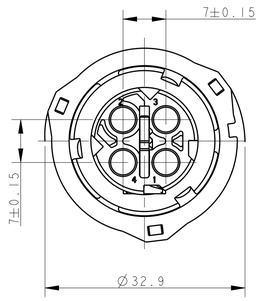

VIEW C
ROTATED

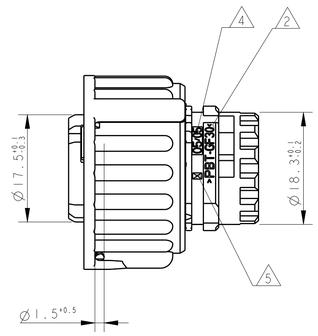

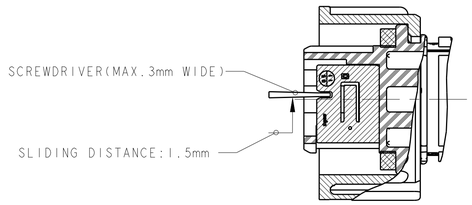

SECTION A-A

SECOND LOCKING DEVICE
IN LOCKED POSITION
10

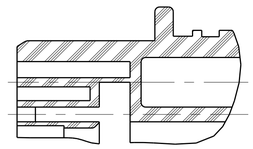

SECTION F-F

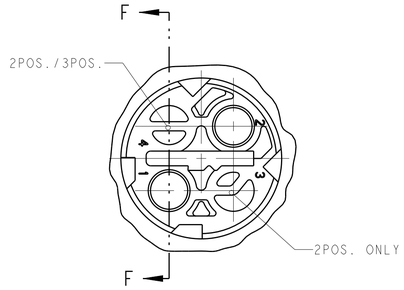

CLOSED CAVITY OF THE
2POS./3POS. SOCKET HOUSING

VIEW D
ROTATED

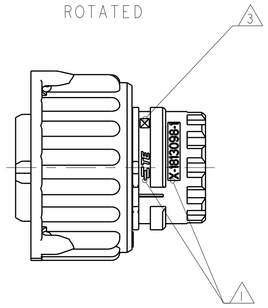

NOTES:

1. TYCO LOGO AND TYCO NUMBER OF SINGLE PART
2. (A2) MATERIAL MARKING,EXCHANGEABLE
3. REVISION OF THE MOULD
4. PRODUCTION DATE
5. CAVITY MARKING
6. FITS TO CONNECTORS ACC. TO DIN 72585/ISO 15170 FORM A AND B AND PIN-HOUSING 2-4POS. TYCO-PN 967402
7. FOR SUITABLE CONTACTS SEE DRAWING: TYCO-PN:1355065 MAX. WIRE THICKNESS:2.5qmm FLR FOR SUITABLE SEALS SEE DRAWING: TYCO-PN:1355070
8. BULK PACKING IN CARDBOARD BOX
9. CODING ACC.TO DIN 72585/ISO15170
10. SECONDARY LOCK IS ONLY AVAILABLE FOR 1-1813099-X,2-1813099-X, 3-1813099-X,4-1813099-X. DETAIL SEE TABLE.

A2

8--6	8--5	8--4	7--6	7--5	7--4	6--6	6--5	6--4	5--6	5--5	5--4	4--6	4--5	4--4	3--6	3--5	3--4	2--6	2--5	2--4	1--6	1--5	1--4	8--3	8--2	8--1	7--3	7--2	7--1	6--3	6--2	6--1	5--3	5--2	5--1	4--3	4--2	4--1	3--3	3--2	3--1	2--3	2--2	2--1	1--3	1--2	1--1	MATERIAL	COLOR	DESCRIPTION	ITEM
1	1	1	1	1	1	1	1	1	1	1	1	1	1	1	1	1	1	1	1	1	1	1	1																									PA6-GF35	BLACK	COUPLING RING	4
																								1	1	1	1	1	1	1	1	1	1	1	1	1	1	1	1	1	1	1	1	1	1	1	1	PA66-GF35	BLACK	COUPLING RING	4
1	1	1	1	1	1	1	1	1	1	1	1	1	1	1	1	1	1	1	1	1	1	1	1	1	1	1	1	1	1	1	1	1	1	1	1	1	1	1	1	1	1	1	1	1	1	1	1	SILICONE RUBBER	ORANGE	SEAL	3
												1	1	1	1	1	1	1	1	1	1	1	1										1	1	1	1	1	1	1	1	1	1	1	1	1	PA6/6T-GF25	YELLOW	SECOND LOCKING DEVICE	2
1												1												1									1														PBT-GF30	BLUE	2POS.SOCKET HOUSING(BLUE)	1
	1												1												1											1											PBT-GF30	BLUE	3POS.SOCKET HOUSING(BLUE)	1
		1												1												1											1									PBT-GF30	BLUE	4POS.SOCKET HOUSING(BLUE)	1
			1												1												1											1							PBT-GF30	GREEN	2POS.SOCKET HOUSING(GREEN)	1
				1												1												1											1					PBT-GF30	GREEN	3POS.SOCKET HOUSING(GREEN)	1
					1												1												1											1				PBT-GF30	GREEN	4POS.SOCKET HOUSING(GREEN)	1
						1												1												1											1			PBT-GF30	GREY	2POS.SOCKET HOUSING(GREY)	1
							1												1												1											1		PBT-GF30	GREY	3POS.SOCKET HOUSING(GREY)	1
								1												1												1											1	PBT-GF30	GREY	4POS.SOCKET HOUSING(GREY)	1
									1												1												1										1		PBT-GF30	BLACK	2POS.SOCKET HOUSING(BLACK)	1
										1												1												1									1		PBT-GF30	BLACK	3POS.SOCKET HOUSING(BLACK)	1
											1												1												1										1	PBT-GF30	BLACK	4POS.SOCKET HOUSING(BLACK)	1

A2

THIS DRAWING IS A CONTROLLED DOCUMENT.

DIMENSIONS: mm

TOLERANCES UNLESS OTHERWISE SPECIFIED: ALL GENERAL TOLERANCE ISO 8015

0 PLC	±0.2
1 PLC	±0.1
2 PLC	±0.01
3 PLC	±0.001
4 PLC	±0.0001
ANGLES	±1°00'

MATERIAL: SEE TABLE

FINISH: - -

DWN A.ZHANG 03JUN2005
CHK R.ZHOU 25OCT2005
APVD K.ODA -
PRODUCT SPEC 108-101006
APPLICATION SPEC 114-18255-0
WEIGHT -

TE Connectivity

NAME: 2.5mm SOCKET CONNECTOR,2-4POS WITH SECONDARY LOCKING

SIZE A1 | CAGE CODE 00779 | DRAWING NO C-1813099 | RESTRICTED TO

SCALE 3:1 | SHEET 1 OF 1 | REV A2

4805 (3/11)

Downloaded From Oneyac.com

单击下面可查看定价，库存，交付和生命周期等信息

>>TE Connectivity(泰科)

Downloaded From Oneyac.com