THIS DRAWING IS UNPUBLISHED. RELEASED FOR PUBLICATION - ,- .
© COPYRIGHT - By - ALL RIGHTS RESERVED.

REVISIONS					
P	LTR	DESCRIPTION	DATE	DWN	APVD
	D	REVISED PER ECO-15-015252	13NOV15	BJ	FY

1. HOUSING MATERIAL: THERMOPLASTIC, BLACK.
2. CONTACT MATERIAL: PHOSPHOR BRONZE.
3. FINISH:
   MATING AREA: MEETS THE PERFORMANCE REQUIREMENTS OF PRODUCT SPECIFICATION 108-9063; BASED ON TELCORDIA DR-1217-CORE APPLICATIONS IN UNCONTROLLED ENVIRONMENTS.
   SOLDER TAILS AREA: TIN-LEAD PLATED.
4. RIGHT ANGLE PIN RECOMMENDED P.C. BOARD HOLE SIZES ARE 0.94-1.09 [.037-.043]; RECOMMENDED PAD DIA IS 1.52 [.060].

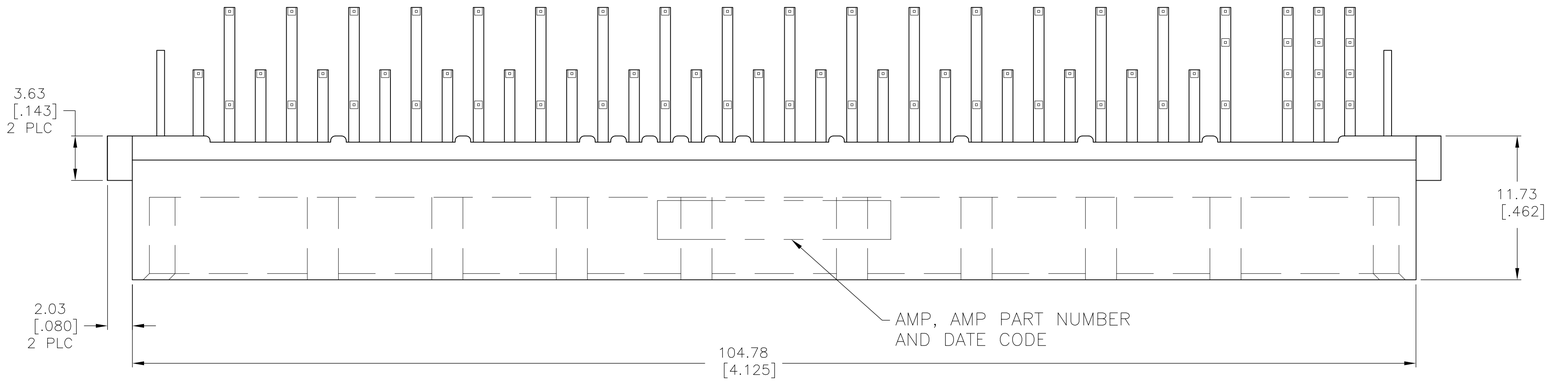

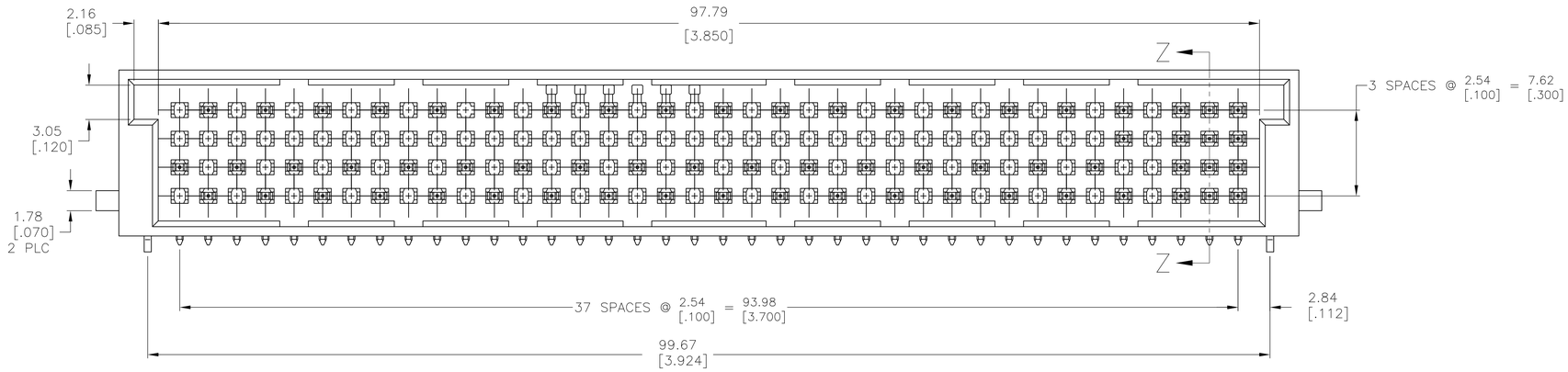

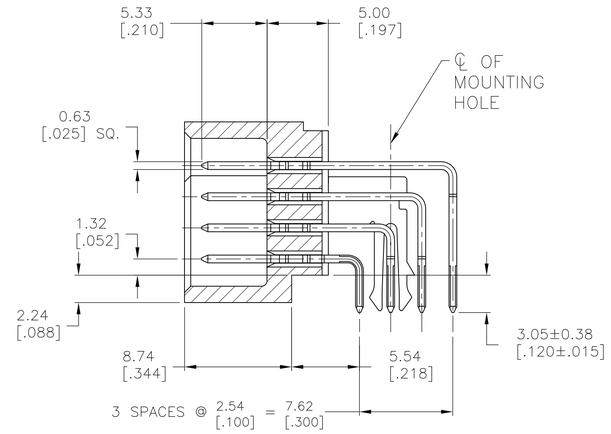

SECTION Z-Z

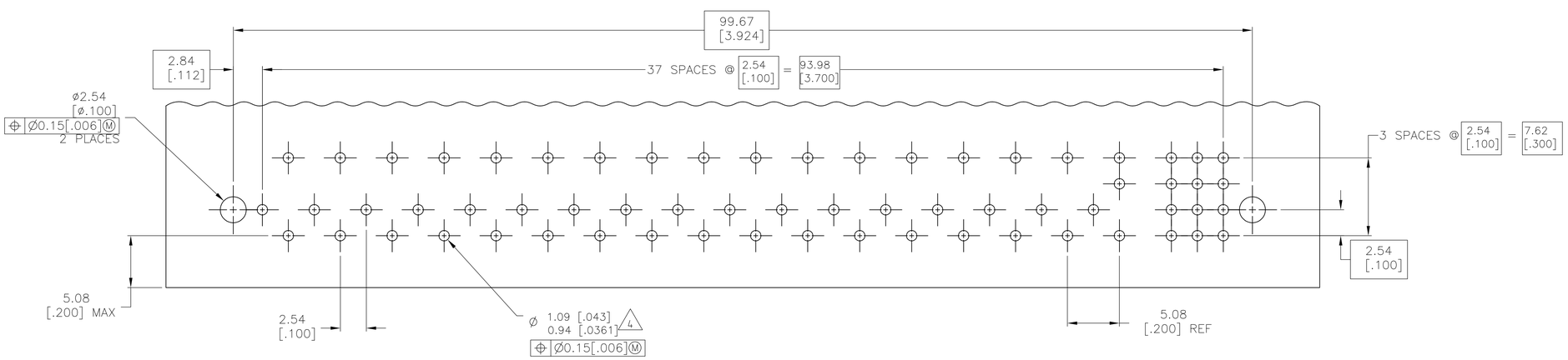

RECOMMENDED P. B. BOARD LAYOUT

| | | | | |

单击下面可查看定价，库存，交付和生命周期等信息

>>TE Connectivity(泰科)

Downloaded From Oneyac.com