THIS DRAWING IS UNPUBLISHED. RELEASED FOR PUBLICATION -,- .
© COPYRIGHT - BY TYCO ELECTRONICS CORPORATION. ALL RIGHTS RESERVED.

LOC	DIST
AJ	16

REVISIONS

P	LTR	DESCRIPTION	DATE	DWN	APVD
	A	REV PER ECO 06-002539	06APR06	GB	JH

1. FOR USE WITH: RG-161/U, 179/U & 187/U CABLE.
2. USE CRIMPING TOOL: PROCRIMPER II 354940-1 WITH DIE SET 91910-1.
3. SEE INSTRUCTION SHEET 408-1799-1.

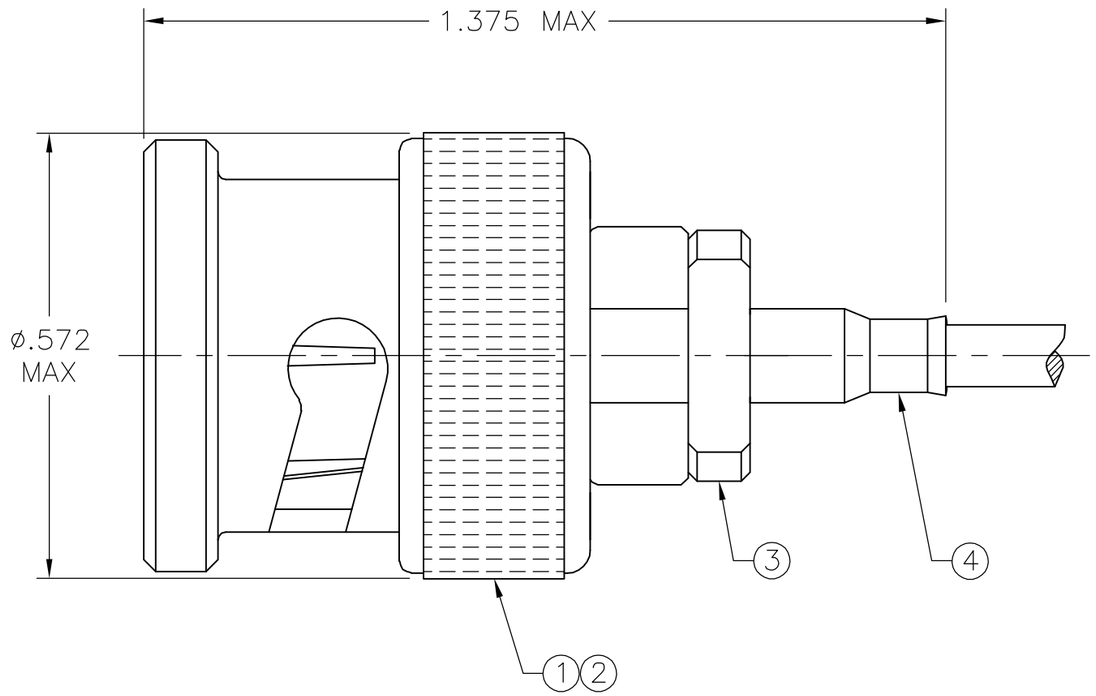

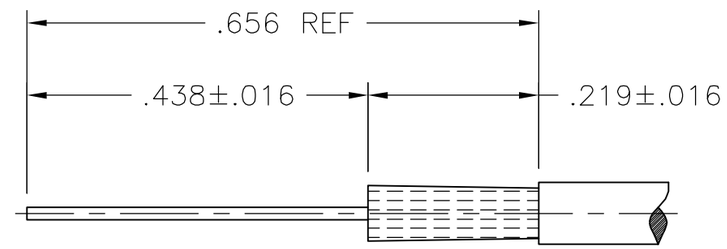

RECOMMENDED STRIP LENGTH

9-328666-3	9-50780-2	2-329106-1	9-329804-0	2-5329446-1
4 FERRULE QTY=1	3 CRIMP AND ASSY QTY=1	2 GASKET QTY=1	1 PLUG ASSEMBLY QTY=1	PART NUMBER

THIS DRAWING IS A CONTROLLED DOCUMENT.

DIMENSIONS: INCHES

TOLERANCES UNLESS OTHERWISE SPECIFIED:
0 PLC ± -
1 PLC ± -
2 PLC ± -
3 PLC ± -
4 PLC ± -
ANGLES ± -

MATERIAL -

FINISH -

DWN B. MCMASTER 10DEC05
CHK J. LIPPERT 10DEC05
APVD J. LIPPERT 10DEC05
PRODUCT SPEC —
APPLICATION SPEC —
WEIGHT —

tyco Electronics
Tyco Electronics Corporation
Harrisburg, PA 17105-3608

NAME
CONNECTOR, COAXIAL
RF PLUG, SERIES BNC

SIZE	CAGE CODE	DRAWING NO	RESTRICTED TO
A3	00779	C-5329446	—

CUSTOMER DRAWING

SCALE	SHEET	REV
5:1	1 OF 1	A

Downloaded From Oneyac.com

单击下面可查看定价，库存，交付和生命周期等信息

>>TE Connectivity(泰科)

Downloaded From Oneyac.com