THIS DRAWING IS UNPUBLISHED. RELEASED FOR PUBLICATION -
© COPYRIGHT - BY - TE CONNECTIVITY ALL RIGHTS RESERVED.

REVISIONS

P	LTR	DESCRIPTION	DATE	DWN	APVD
	A8	REV PER ECR-15-007945	16MAY2015	ML	SZ
	A9	ADDED DASH NUMBER -4	07FEB2018	ML	SZ

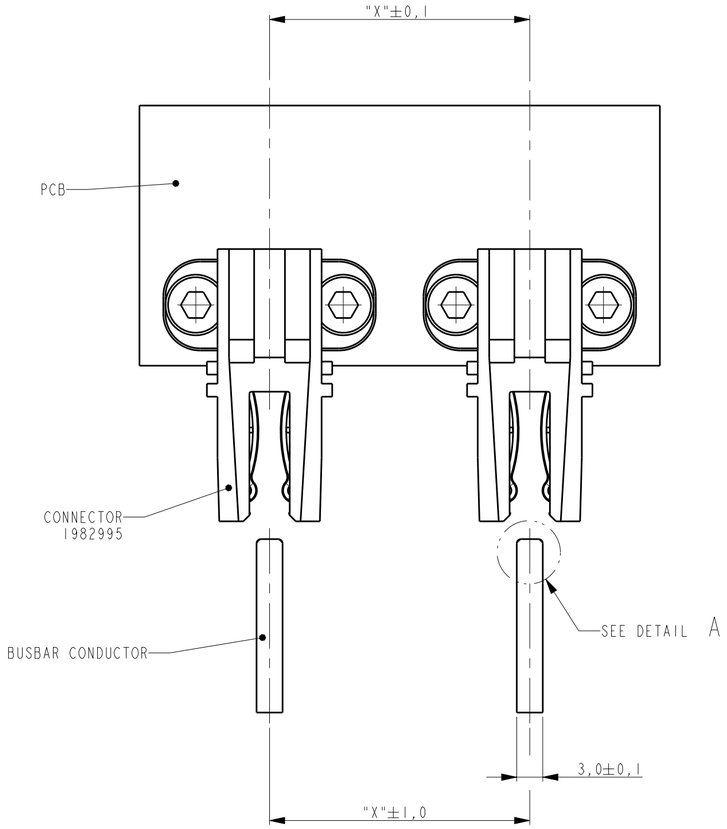

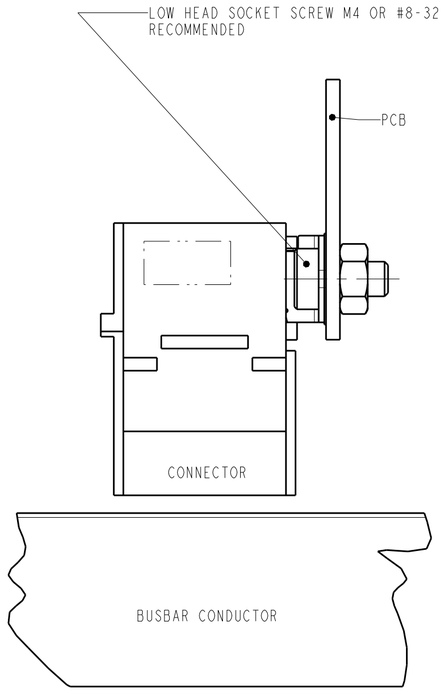

PCB, BUSBAR-CONDUCTORS,
SCREWS AND NUTS IN THESE VIEWS
ARE SHOWN FOR REFERENCE ONLY.

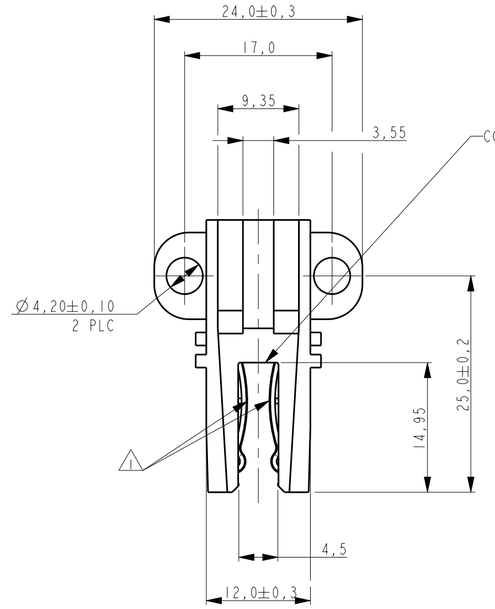

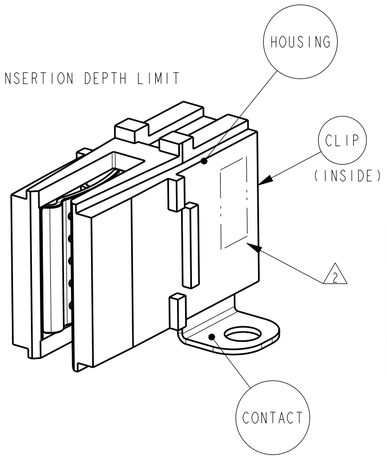

THE REFERENCE CONSTRUCTION
P/N: 1982995-1/-2

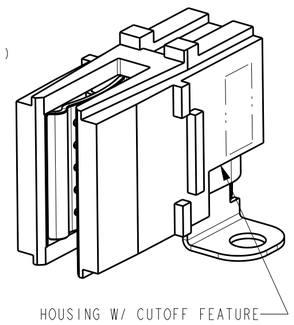

THE REFERENCE CONSTRUCTION
P/N: 1982995-3/-4

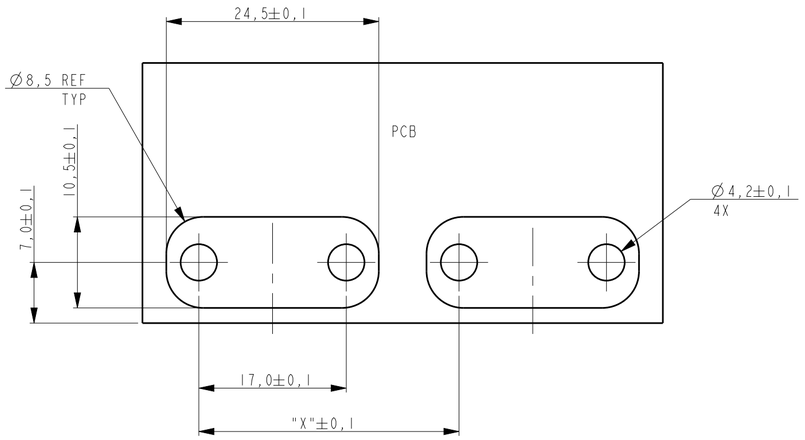

RECOMMENDED PCB LAY-OUT
THICKNESS: 1,5 mm Min.

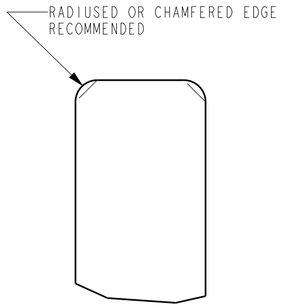

DETAIL A
SCALE 10:1

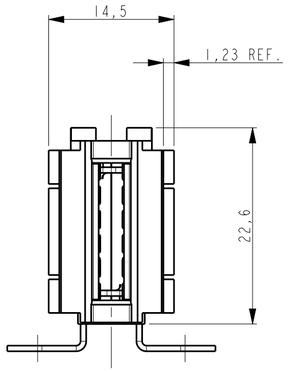

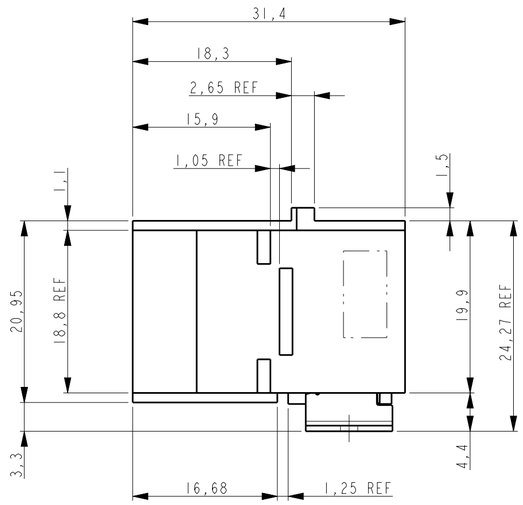

NOTES:

1. PLATING: 1,2µm MIN. NICKEL UNDERLAYER ALLOVER.
   3,0µm MIN. TIN IN INDICATED AREA.
2. PRINT AREA FOR PART NUMBER AND DATE CODE.
3. PLATING: 1,2µm MIN. NICKEL UNDERLAYER ALLOVER.
   3,0µm MIN. SILVER IN INDICATED AREA.
4. MATERIAL:
   POWER CONTACT: COPPER ALLOY
   CLIP: STAINLESS STEEL
   HOUSING: PBT, BLACK, UL94V-0 FLAMMABLITY RATED.

PLATING	DESCRIPTION	PART NUMBER
2	CROWN CLIP JUNIOR W/ CUTOFF FEATURE,SILVER PLATING	1982995-4
1	CROWN CLIP JUNIOR W/ CUTOFF FEATURE,TIN PLATING	1982995-3
3	CROWN CLIP JUNIOR, SILVER PLATING	1982995-2
1	CROWN CLIP JUNIOR, TIN PLATING	1982995-1

THIS DRAWING IS A CONTROLLED DOCUMENT.

DIMENSIONS: mm

TOLERANCES UNLESS OTHERWISE SPECIFIED:
0 PLC ±-
1 PLC ±0.3
2 PLC ±0.15
3 PLC ±0.005
4 PLC ±-
ANGLES ±2°

MATERIAL 4

FINISH 1 3

DWN J.VOS 13-Feb-08
CHK R.DAAMEN 13-Feb-08
APVD R.VD SANDT -
PRODUCT SPEC 108-19360
APPLICATION SPEC 114-19128
WEIGHT -

Customer Drawing

TE Connectivity

NAME
PLUGGABLE BUSBAR CONNECTOR
SCREW MOUNT VERSION
CROWN CLIP JUNIOR

SIZE	CAGE CODE	DRAWING NO	RESTRICTED TO
A2	-	C-1982995	-

SCALE 2:1 SHEET 1 OF 1 REV A9

1471-9 (3/13)

Downloaded From Oneyac.com

单击下面可查看定价，库存，交付和生命周期等信息

>>TE Connectivity(泰科)

Downloaded From Oneyac.com