THIS DRAWING IS UNPUBLISHED. RELEASED FOR PUBLICATION -,- .
© COPYRIGHT – BY TYCO ELECTRONICS CORPORATION. ALL RIGHTS RESERVED.

LOC	DIST
AD	00

REVISIONS

P	LTR	DESCRIPTION	DATE	DWN	APVD
	K1	ECO-05-16253	01FEB06	MB	JO

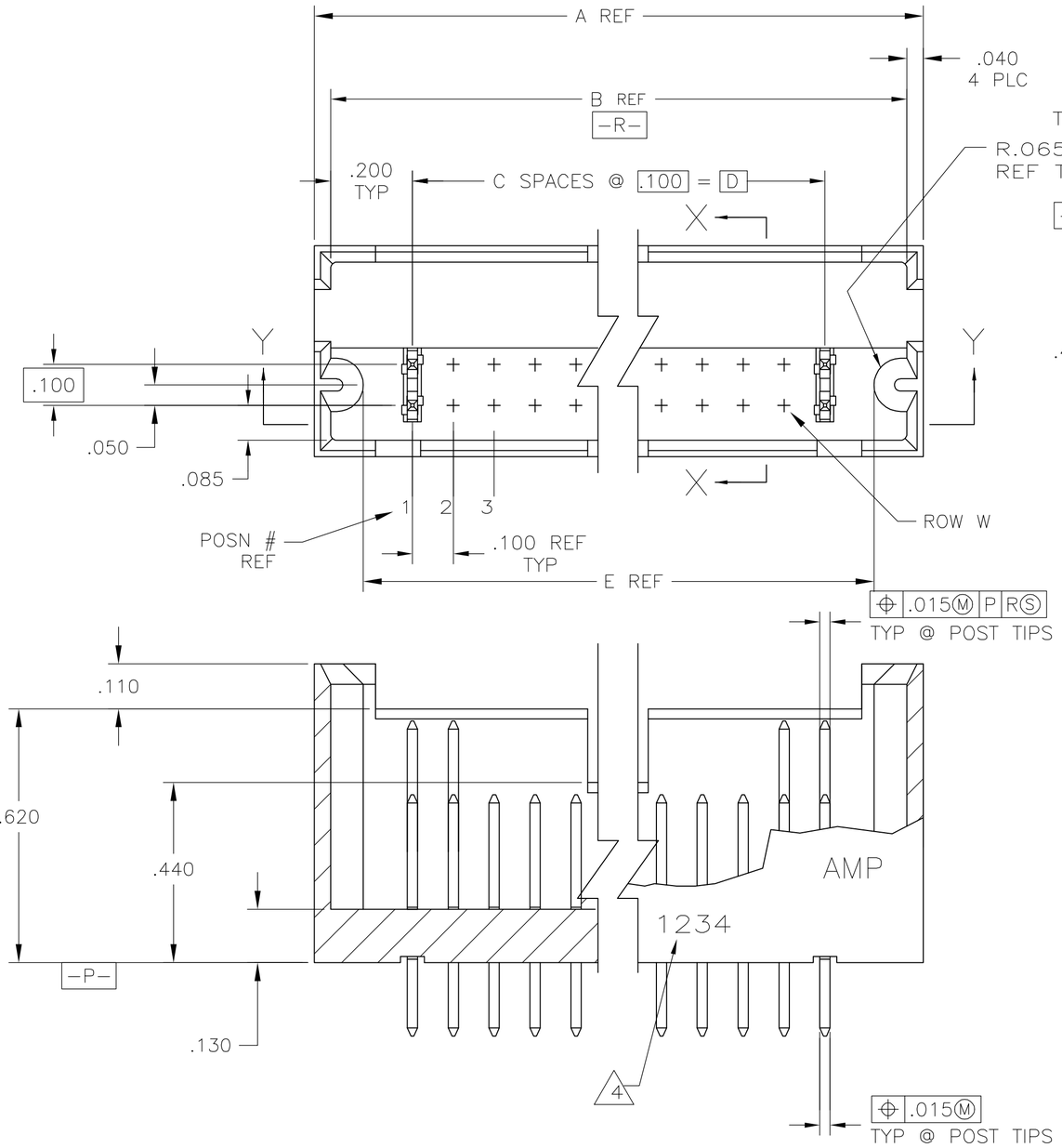

SECT Y — Y

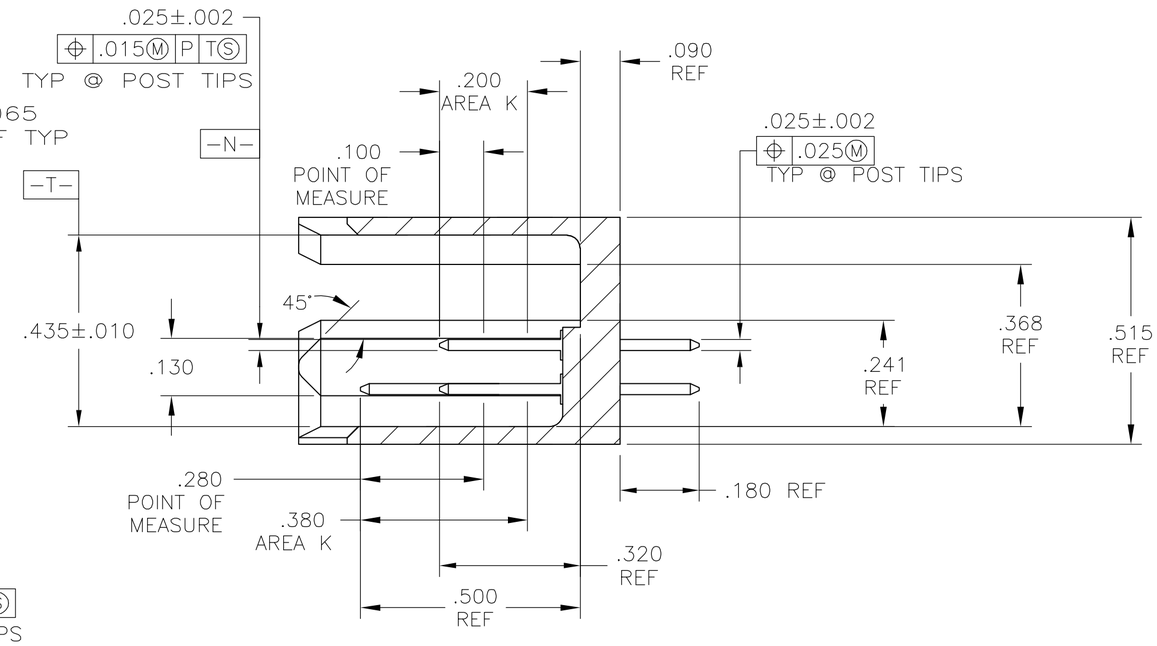

SECT X — X

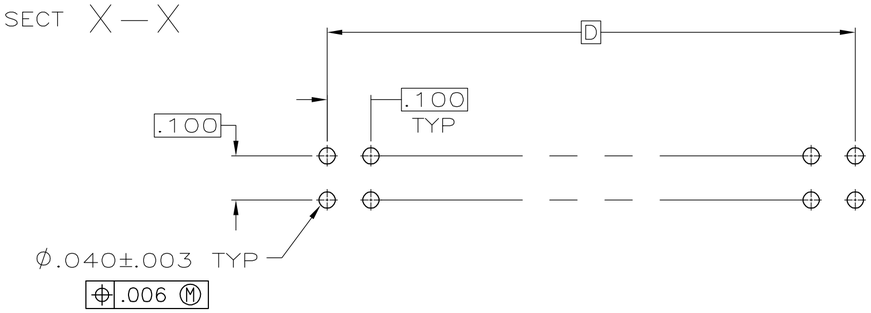

535552

	FINISH	SELECT LOADING ROW W POST	E	D	C	B	A	NO OF POSN	PART NUMBER
	5	1,30	3.140	2.900	29	3.300	3.380	60	6 5-535552-5
OBSOLETE	3	1,35	3.640	3.400	34	3.800	3.880	70	535552-6
	3	1,30	3.140	2.900	29	3.300	3.380	60	535552-5
OBSOLETE	3	2,4,30	3.140	2.900	29	3.300	3.380	60	535552-4
OBSOLETE	3	1,2,6,7	.840	.600	6	1.000	1.080	14	535552-3
OBSOLETE	3	1-4, 37-40	4.140	3.900	39	4.300	4.380	80	535552-2
OBSOLETE	3	2	2.140	1.900	19	2.300	2.380	40	535552-1

1. MATL: GLASS FILLED NYLON
   COLOR: BLACK
2. POST MATL: PHOSPHOR BRONZE
3. DUPLEX PLATED .000030 GOLD ON CONTACT AREA K, .000010 – .000200 BRIGHT TIN LEAD ON SOLDER LEADS, ALL OVER .000050 NICKEL
4. RECESSED DATE CODE & CSA LOGO
5. DUPLEX PLATED .000030 GOLD ON CONTACT AREA K, .000010 – .000200 MATTE TIN ON SOLDER LEADS, ALL OVER .000050 NICKEL
6. ROHS 2002/95/EC COMPLIANT.

THIS DRAWING IS A CONTROLLED DOCUMENT.

DIMENSIONS: INCHES

TOLERANCES UNLESS OTHERWISE SPECIFIED:
0 PLC ± –
1 PLC ± –
2 PLC ± –
3 PLC ± .005
4 PLC ± –
ANGLES ± –

MATERIAL 1 2

FINISH SEE TABLE

DWN B. HAYMAKER 11JAN01
CHK J. GESFORD 29OCT98
APVD J. GESFORD 29OCT98
PRODUCT SPEC –
APPLICATION SPEC –
WEIGHT –

tyco Electronics
Tyco Electronics Corporation
Harrisburg, PA 17105-3608

NAME
ASSM. HDR. SHROUD, MOD II, .100x.100CL, .025 SQ STANDARD POST
–

SIZE	CAGE CODE	DRAWING NO	RESTRICTED TO
A2	00779	C-535552	–

CUSTOMER DRAWING | SCALE 4:1 | SHEET 1 OF 1 | REV K1

AMP 1471-9 REV 31MAR2000

Downloaded From Oneyac.com

单击下面可查看定价，库存，交付和生命周期等信息

>>TE Connectivity(泰科)

Downloaded From Oneyac.com