THIS DRAWING IS UNPUBLISHED. RELEASED FOR PUBLICATION -,- .
© COPYRIGHT - BY TYCO ELECTRONICS CORPORATION. ALL RIGHTS RESERVED.

LOC	DIST
GP	00

REVISIONS

P	LTR	DESCRIPTION	DATE	DWN	APVD
	B	REVISED PER ECO-09-005756	15APR2009	ZMR	SLB

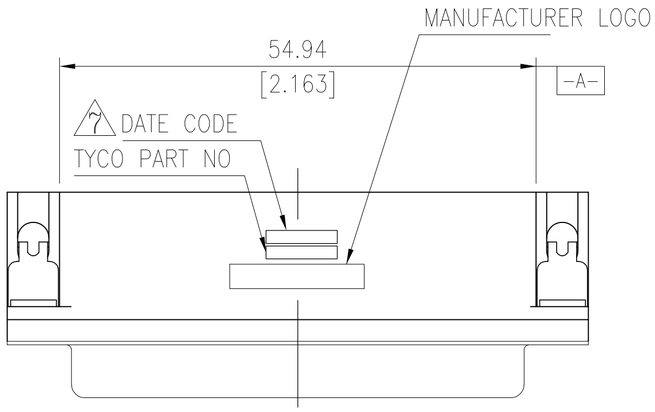

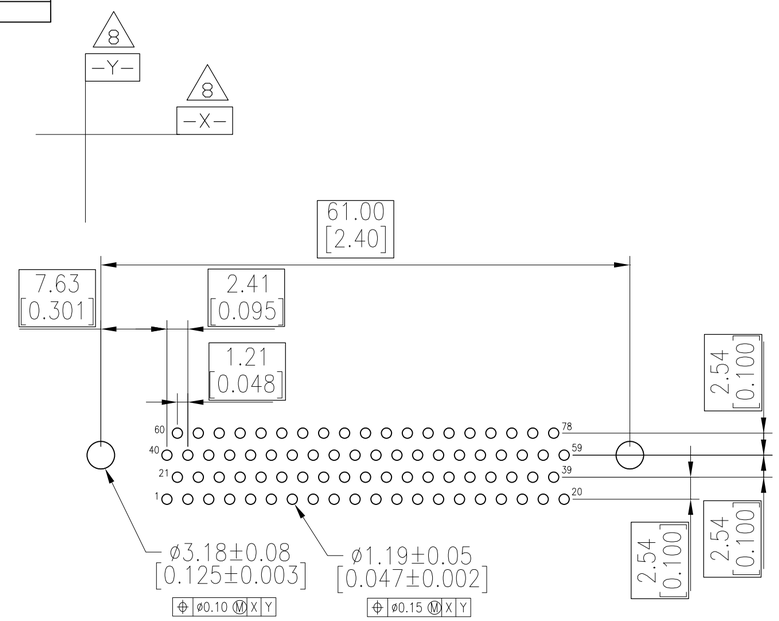

RECOMMENDED PCB LAYOUT

1. HOUSING MATERIAL: PBT, GLASS FILLED, BLACK, UL 94V-0 RATED.
2. CONTACT MATERIAL: PHOSPHOR BRONZE.
3. CONTACT FINISH: GOLD PLATE IN MATING AREA (SEE TABLE), 120µ" MIN TIN PLATE ON SOLDER TAIL, BOTH OVER 50µ" MIN NICKEL UNDERPLATE.
4. SHELL: STEEL, NICKEL PLATE.
5. BOARDLOCK: BRASS, 100µ" MIN TIN PLATE.
6. FEMALE SCREWLOCKS/ THREADED INSERTS: BRASS, NICKEL PLATE.

7 FOUR DIGIT DATE CODE IN THIS FORMAT.

01 45

Year — Manufacturing Week

8 DATUMS -X- & -Y- TO BE ESTABLISHED BY CUSTOMER.

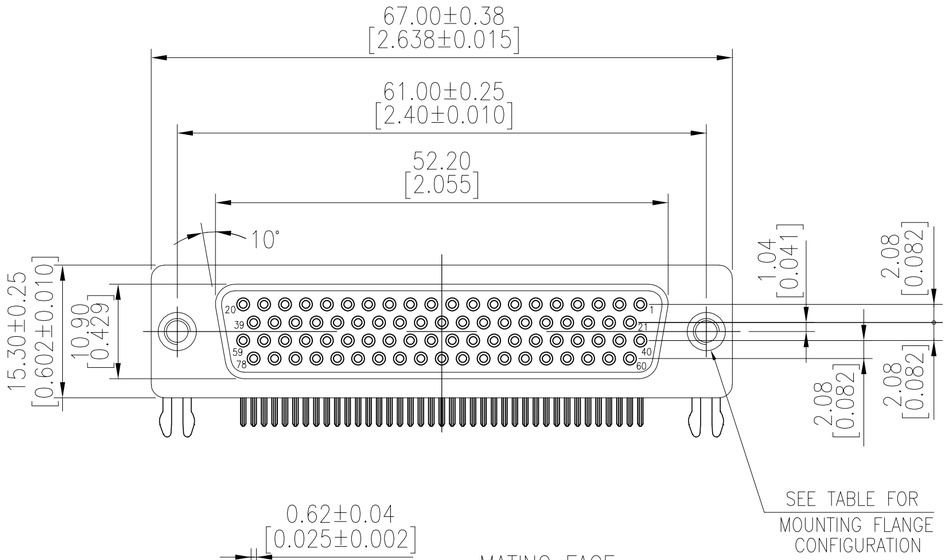

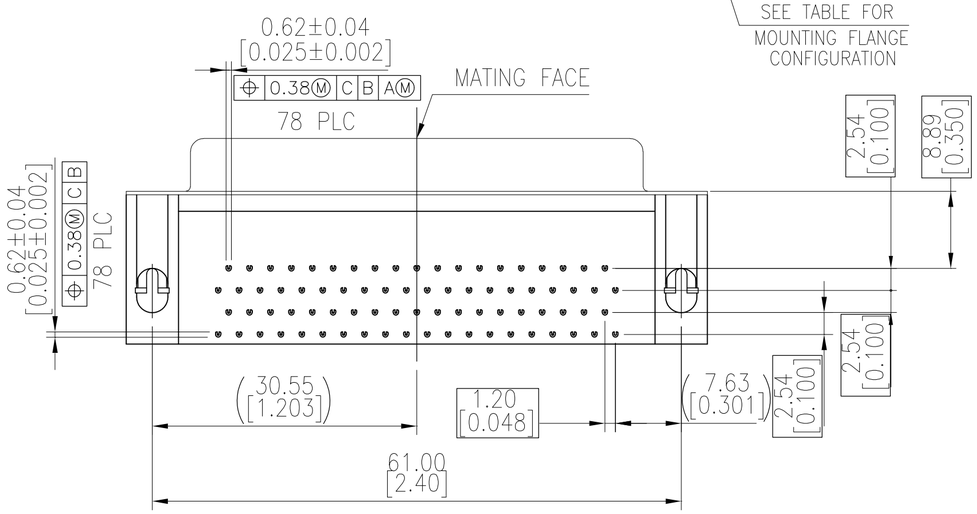

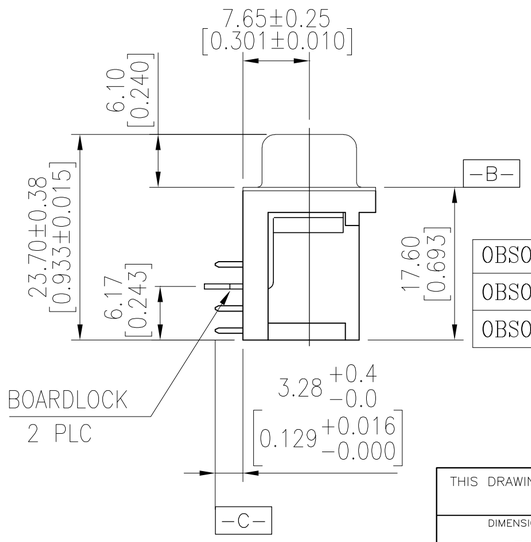

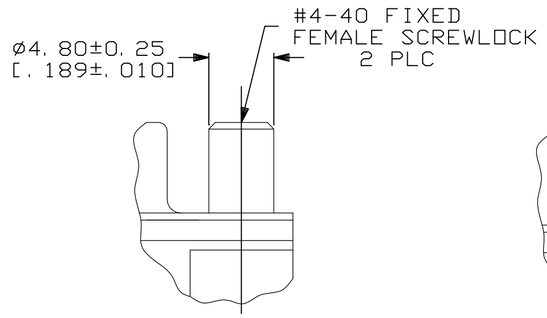

Detail A

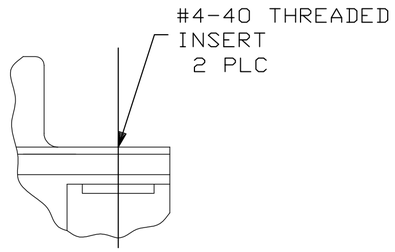

Detail B

OBSOLETE	Tray	Detail A	15µ" MIN	2-5748483-2
OBSOLETE	Tray	Detail B	Gold flash	2-5748483-1
OBSOLETE	Tray	Detail B	15µ" MIN	2-5748483-0
	Tray	Detail A	30µ" MIN	5748483-6
	Tray	Detail B	30µ" MIN	5748483-5
	Packaging	Mounting Flange Configuration	Contact Mating Area Finish	AMP Part NO.

5748483-5, 2--0, & 2--1 SHOWN

THIS DRAWING IS A CONTROLLED DOCUMENT.

DIMENSIONS: mm

TOLERANCES UNLESS OTHERWISE SPECIFIED:

0 PLC	± -
1 PLC	± 0.30
2 PLC	± 0.20
3 PLC	± 0.10
4 PLC	± -
ANGLES	± 2°

MATERIAL -

FINISH -

DWN	B.MCMASTER	21SEP05
CHK	S. BOLASH	21SEP05
APVD	M. WALMSLEY	21SEP05

PRODUCT SPEC —

APPLICATION SPEC —

WEIGHT —

CUSTOMER DRAWING

Tyco Electronics

Tyco Electronics Corporation
Harrisburg, PA 17105-3608

NAME
AMPLIMITE HD-22
78 POS RECEPTACLE, RIGHT ANGLE

SIZE	CAGE CODE	DRAWING NO	RESTRICTED TO
A2	00779	C-5748483	—

SCALE	SHEET	REV
4:1	1 OF 1	B

5748483

Downloaded From Oneyac.com

单击下面可查看定价，库存，交付和生命周期等信息

>>TE Connectivity(泰科)

Downloaded From Oneyac.com