DO NOT SCALE	METRIC	THIRD ANGLE PROJECTION
DIMENSIONS IN mm		

NOTES:

1. DIMENSION MUST BE CHECKED WITH TOP OF BOX TOUCHING CARRIERSIDE OF BOX.
2. OBSOLETE PARTS: OBSOLETE CIS STREAMLINING PER D.RENAUD/D.SINISI

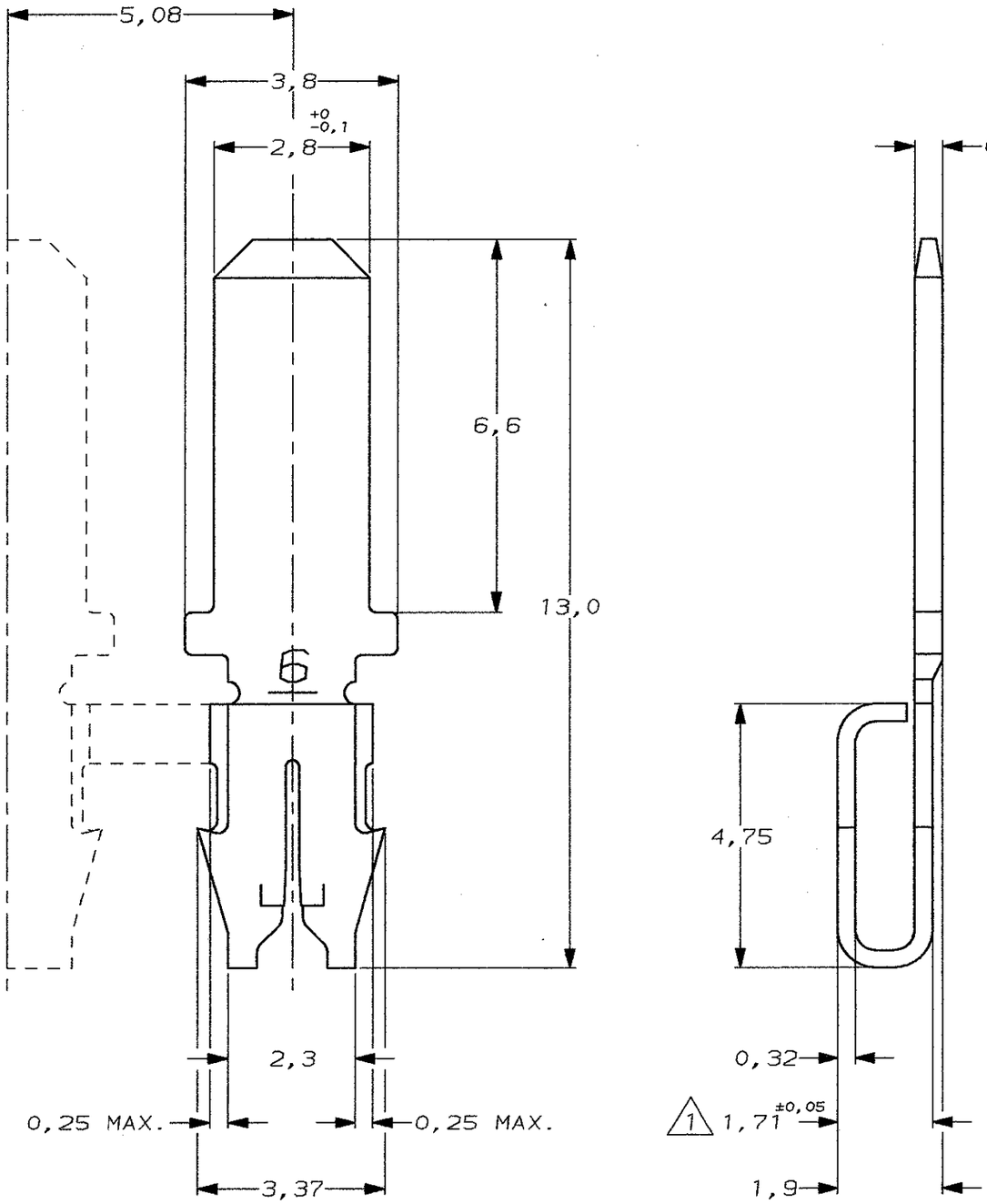

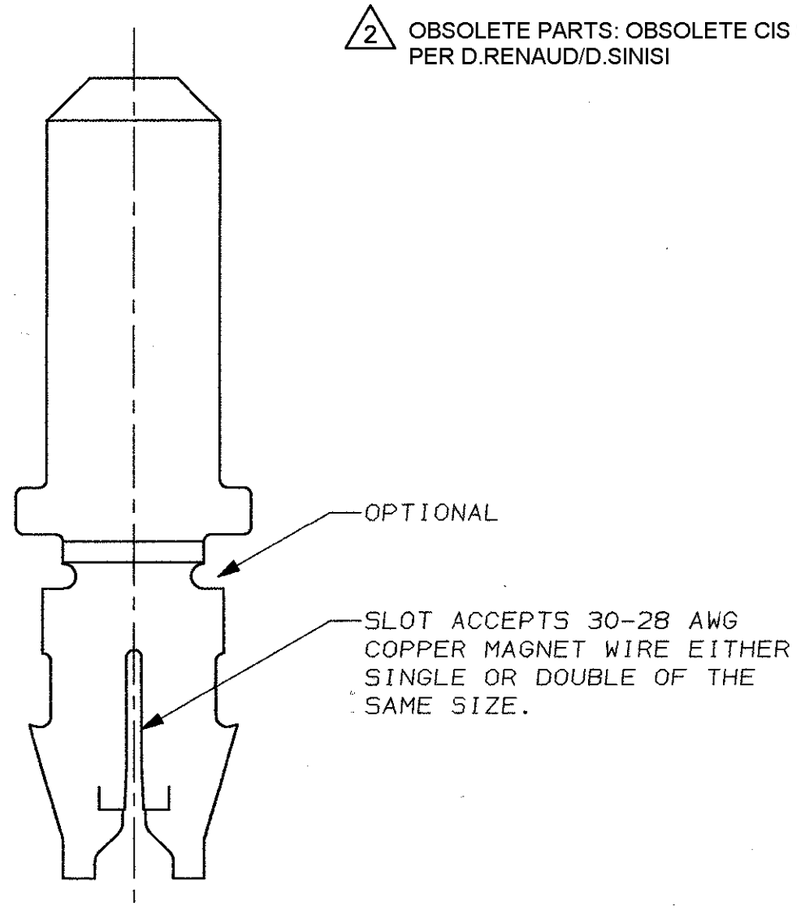

2	OBSOLETE	TINPLATED	L.P OF 160810-2	160810-4
		TINPLATED	BRASS	160810-2
		FINISH	MATERIAL	PARTNUMBER
–	–	–	–	–
–	–	–	–	–
–	–	–	–	–
–	–	–	–	–
B1	ECO-09-022178	KK		25/09/09
B	EH-00-1581-99	MD	MD	08 OCT 99
A	EH-0945-97	D.K.	M.v.D	18 SEP 97
LTR.	REVISION RECORD	DR.	CHK.	DATE

WIRE RANGE : 30-28 AWG

INSULATION RANGE : – DIA.

CUSTOMER DRAWING — FOR REFERENCE ONLY WILL NOT BE UPDATED

© COPYRIGHT 19– BY AMP HOLLAND B.V.
ALL INTERNATIONAL RIGHTS RESERVED. AMP PRODUCTS MAY BE COVERED BY U.S. AND FOREIGN AND/OR PATENTS PENDING.

THIS DRAWING IS UNPUBLISHED
~~RELEASED FOR PUBLICATION ,19~~

AMP — AMP HOLLAND B.V. 's-Hertogenbosch, The Netherlands.

NAME: MAG-MATE 4,75 WITH TAB 2,8

DR.: D. KESSLER	CHK.: M. v. DRIEL	APP.: M. v. DRIEL	DWG.No.	REV.LTR.	SHEET	
DATE: 18 SEP 97	DATE: 19/09/97	DATE: 19/09/97	C-160810	B1	1 OF 1	A3

R6-128 (REV.04-91)

Downloaded From Oneyac.com

单击下面可查看定价，库存，交付和生命周期等信息

>>TE Connectivity(泰科)

Downloaded From Oneyac.com