THIS DRAWING IS UNPUBLISHED. RELEASED FOR PUBLICATION ,19 .
© COPYRIGHT 19 BY AMP INCORPORATED. ALL RIGHTS RESERVED.

LOC	DIST
G	14

REVISIONS

P	LTR	DESCRIPTION	DATE	DWN	APVD
	C	REV / OL20-0042-96	07JAN97	ME	TM

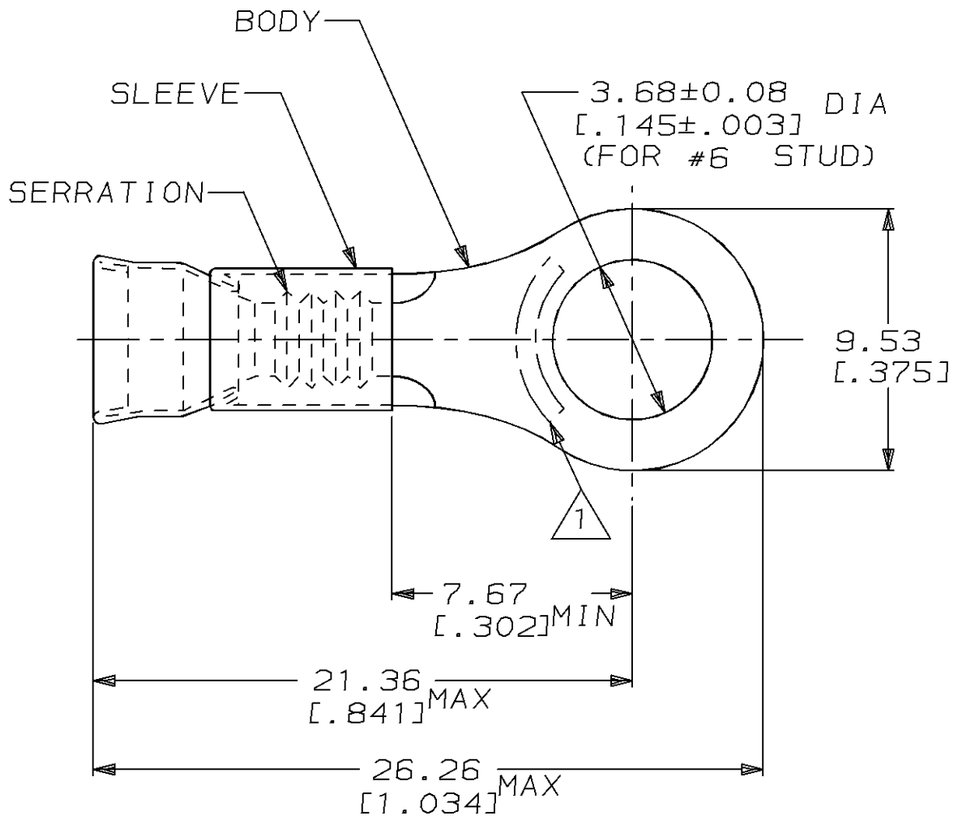

1. STAMP AMP 12-10*APPROX AS SHOWN

2. WIRE INSUL DIA, 3.81-5.84 [.150-.230]

3. TONGUE MATL THK, 1.02±0.05 [.040±.002]

QTY	PACKAGE TYPE	PART NO
500	LOOSE PIECE	323066

AMP INCORPORATED
CUSTOMER SERVICE SYSTEM

FOR ADDITIONAL PRODUCT INFORMATION OR COPIES OF DRAWINGS AND TECHNICAL DOCUMENTS	PRODUCT INFORMATION CENTER 1-800-522-6752
FOR APPLICATION TOOLING INFORMATION	TOOLING ASSISTANCE CENTER 1-800-722-1111
FOR ORDER ENTRY	1-800-526-5142

MAX RECOMMENDED OPERATING TEMPERATURE: 343°C [650°F]

VOLTAGE RATING: - -

CIRCULAR MIL AREA: 2.62mm²-6.64mm² [5180-13100]

STRANDED WIRE

THIS DRAWING IS A CONTROLLED DOCUMENT FOR AMP INCORPORATED. IT IS SUBJECT TO CHANGE AND THE CONTROLLING ENGINEERING ORGANIZATION SHOULD BE CONTACTED FOR THE LATEST REVISION.

DIMENSIONS: mm [in]

TOLERANCES UNLESS OTHERWISE SPECIFIED,

0 PLC	±-
1 PLC	±-
2 PLC	±0.20 [.008]
3 PLC	±-
4 PLC	±-
ANGLES	±-

MATERIAL: BODY, CU PER ASTM B152; SLEEVE, NI SIL PER ASTM B122

FINISH: BODY, NP, QQ-N-290

DWN	L OLMEDA	100CT94
CHK	M ELLIS	100CT94
APVD	S BORTNER	100CT94
PRODUCT SPEC	–	
APPLICATION SPEC	–	
WEIGHT	–	

AMP Incorporated
Harrisburg, PA 17105-3608

NAME: TERMINAL, RING TONGUE, STRATO-THERM™, DIAMOND GRIP™, WIRE SIZE, 12-10 AWG

SIZE	CAGE CODE	DRAWING NO
A3	00779	C-323066

CUSTOMER DRAWING

SCALE	SHEET	REV
4:1	1 OF 1	C

AMP 1470-19 REV 09MAY94

Downloaded From Oneyac.com

07 JAN 1997 08:57:19 AMP10398 <UU128A>DEPT1132>U.DW01132>U.RBT>U.DIAMOND-GRIP>U.STRA[OTHERM>U.CUST

单击下面可查看定价，库存，交付和生命周期等信息

>>TE Connectivity(泰科)

Downloaded From Oneyac.com