THIS DRAWING IS UNPUBLISHED. RELEASED FOR PUBLICATION . .
© COPYRIGHT — BY — ALL RIGHTS RESERVED.

LOC	DIST
DY	-

REVISIONS

P	LTR	DESCRIPTION	DATE	DWN	APVD
	P	REVISED PER ECO-11-005139	19MAR11	RK	HMR

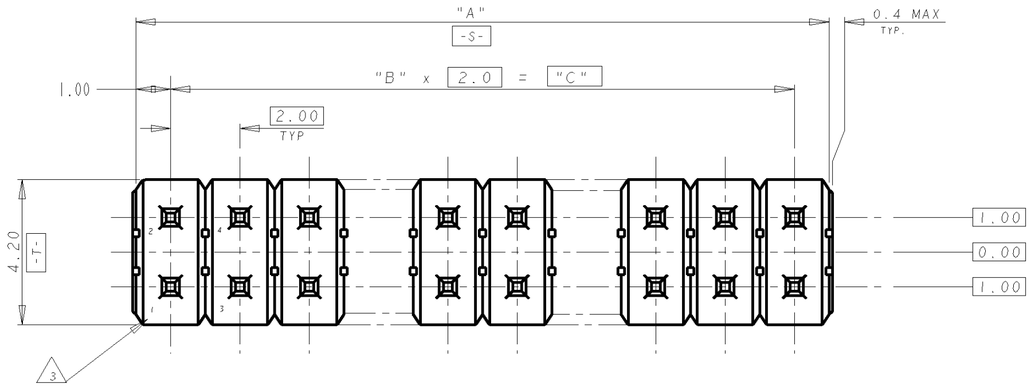

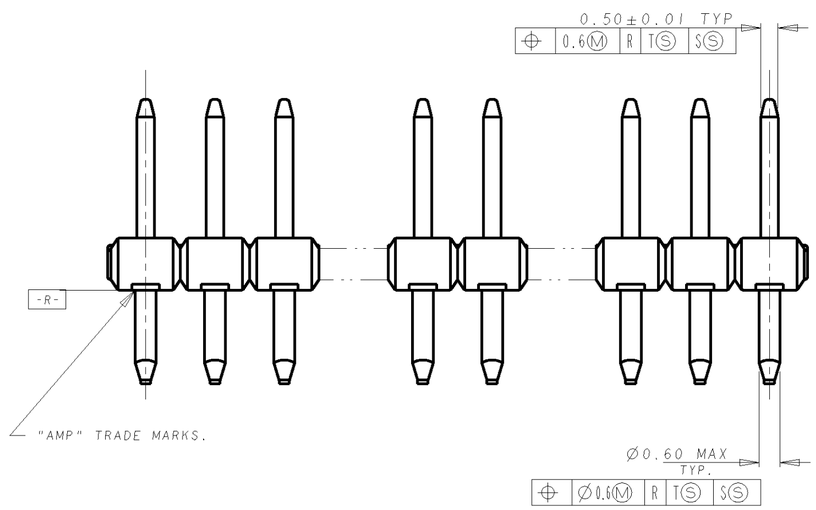

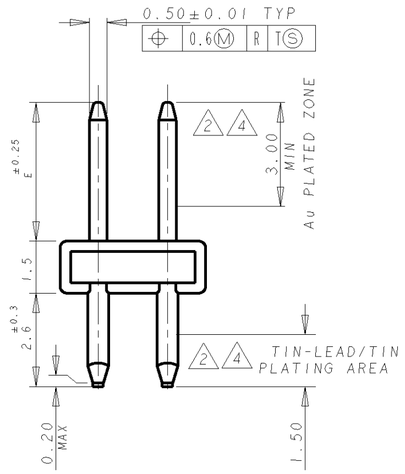

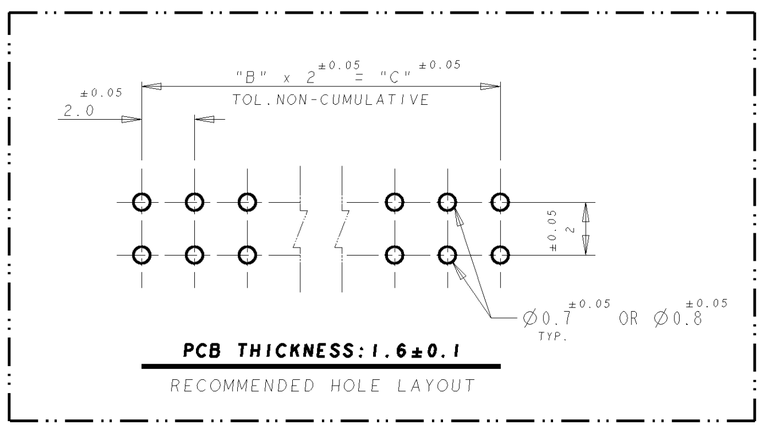

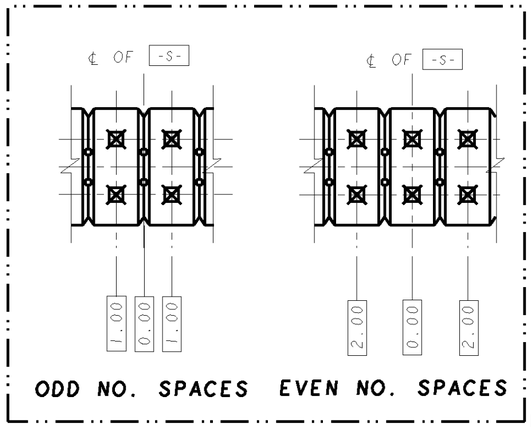

NOTES;

1. MATERIAL — HOUSING: THERMOPLASTIC, UL 94V-0.
   POST : BRASS
2. FINISH — CONTACT AREA, "D" MIN Au
   ON NICKEL 0.0013 MIN ALL OVER
   POST TINE: 0.002 MIN MATTE TIN
3. POST POSITION NUMBERS FOR REFERENCE ONLY.

FINISH	PIN OMITTED	"E"	"D"	"C"	"B" SPACES	"A"	POS	P/N
	NIL	4.00	0.0002	4	2	6	6	5- -8
	17	4.00	0.00076	24	12	26	26	5- -7
	9, 10	5.00	0.00076	24	12	26	26	5- -6
	1, 14		0.00076	14	7	16	16	5- -5
	1, 12		0.00076	10	5	12	12	5- -4
	NIL		0.00076	—	—	2	2	5- -3
	25		0.00076	48	24	50	50	5- -2
	25		0.0002	48	24	50	50	5- -1
				48	24	50	50	4- -8
				46	23	48	48	4- -7
				44	22	46	46	4- -6
				42	21	44	44	4- -5
			0.00076	34	17	36	36	4- -1
				48	24	50	50	3- -9
				42	21	44	44	3- -6
				38	19	40	40	3- -4
			0.0002	34	17	36	36	3- -2
				28	14	30	30	2- -9
				22	11	24	24	2- -6
				20	10	22	22	2- -5
				18	9	20	20	2- -4
				16	8	18	18	2- -3
				14	7	16	16	2- -2
				12	6	14	14	2- -1
				10	5	12	12	2- -0
				8	4	10	10	1- -9
				6	3	8	8	1- -8
				4	2	6	6	1- -7
			0.00076	2	1	4	4	1- -6
				30	15	32	32	1- -5
				28	14	30	30	1- -4
				26	13	28	28	1- -3
				22	11	24	24	1- -1
				20	10	22	22	1- -0
				18	9	20	20	-9
				16	8	18	18	-8
				14	7	16	16	-7
				12	6	14	14	-6
				10	5	12	12	-5
				8	4	10	10	-4
				6	3	8	8	-3
2	NIL	4.00	0.0002	2	1	4	4	5176264-1

5176264

DWN	WYLEE 07MAR2005
CHK	VINCENT TAN
APVD	SF LEONG
PRODUCT SPEC	-
APPLICATION SPEC	-
WEIGHT	-

DIMENSIONS: mm

TOLERANCES UNLESS OTHERWISE SPECIFIED:
0 PLC ±-
1 PLC ±-
2 PLC ±-
3 PLC ±-
4 PLC ±-
ANGLES ±-
FINISH 2

MATERIAL 1

GENERAL TOLERANCE
0<•≤ 10 : ±0.2
10<•≤ 30 : ±0.25
30<•≤100 : ±0.3
ANGLES : ±3°

TE Connectivity

NAME: AMPMODU 2mm PITCH POST HDR, VERTICAL MOUNT TYPE

SIZE	CAGE CODE	DRAWING NO
A2	00779	C-5176264

SCALE 8:1 SHEET 1 OF 1 REV P

CUSTOMER DRAWING

AMP 1471-9 REV 09MAY94

Downloaded From Oneyac.com

Pro/ENGINEER DRAWING

单击下面可查看定价，库存，交付和生命周期等信息

>>TE Connectivity(泰科)

Downloaded From Oneyac.com