THIS DRAWING IS UNPUBLISHED. RELEASED FOR PUBLICATION - -, .
© COPYRIGHT - TE Connectivity ALL RIGHTS RESERVED.

REVISIONS

P	LTR	DESCRIPTION	DATE	DWN	APVD
	C	REVISED PER ECO-18-008015	24MAY2018	AP	DG

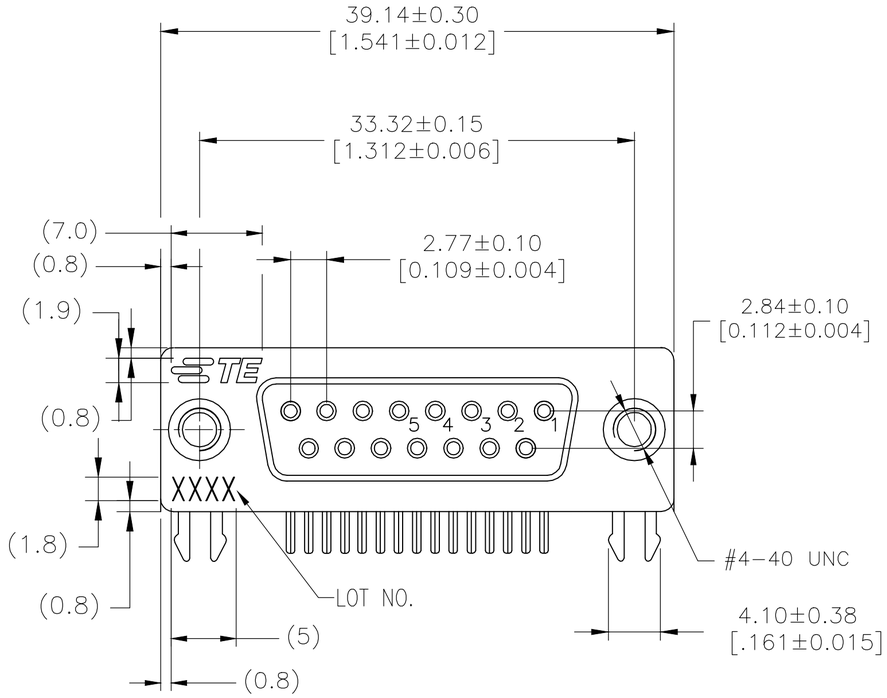

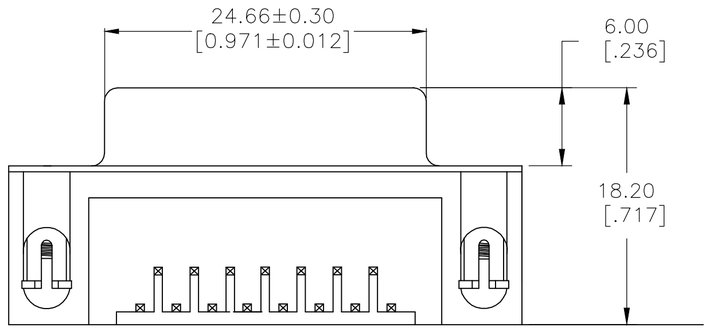

RECOMMENDED PCB LAYOUT
TOLERANCE IS ±0.05

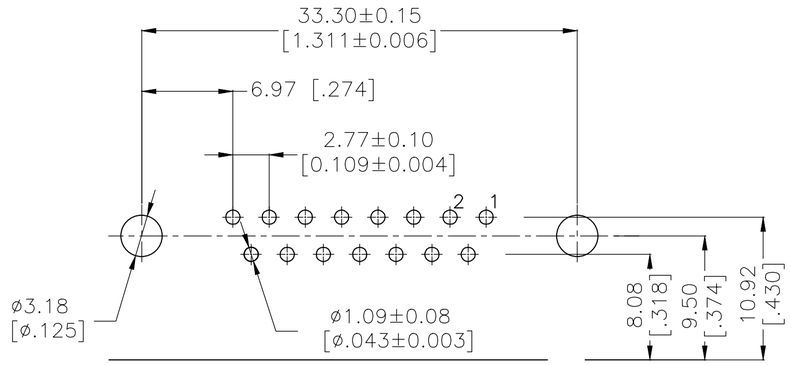

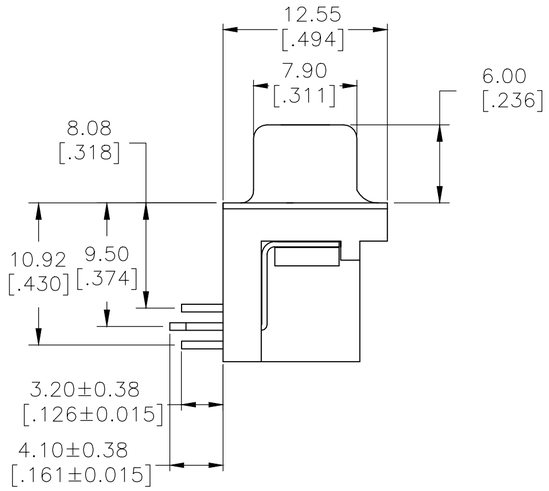

NOTES:

HOUSING:PBT+GF(UL94V-0) BLACK
CONTACT:PHOSPHOR BRONZE
" GOLD PLATING ON CONTACT AREA
100u" MATTE TIN PLATING ON SOLDERTAIL
50u" NICKEL UNDERPLATED OVERALL

HOLDDOWN:BRASS,100u" TIN OVER 50u" NICKEL
SHELL:SPCC,50u" NICKEL PLATED
RIVET:BRASS,50u" NICKEL PLATED

LOT NUMBER "XXXX"
- STANDS FOR CALENDAR YEAR
- STANDS FOR WEEK NUMBER

2311767

YES	Au Flash	2311767-1
SCREWLOCK	Contact Area Plating	P/N

THIS DRAWING IS A CONTROLLED DOCUMENT.

DIMENSIONS: mm [INCHES]

TOLERANCES UNLESS OTHERWISE SPECIFIED:
0 PLC ± -
1 PLC ± -
2 PLC ± 0.25
3 PLC ± -
4 PLC ± -
ANGLES ± -

MATERIAL -
FINISH -

DWN AJITH PAI 22FEB2017
CHK DANIEL GORENC 22FEB2017
APVD DANIEL GORENC 22FEB2017
PRODUCT SPEC 108-130023
APPLICATION SPEC —
WEIGHT

TE Connectivity

NAME AMPLIMITE RECEPTACLE, HD22, RIGHT ANGLE, 15P
-
-

SIZE	CAGE CODE	DRAWING NO	RESTRICTED TO
A2	00779	C-2311767	—

CUSTOMER DRAWING | SCALE 3:1 | SHEET 1 OF 1 | REV C

1471-9 (1/15)

Downloaded From Oneyac.com

单击下面可查看定价，库存，交付和生命周期等信息

>>TE Connectivity(泰科)

Downloaded From Oneyac.com