THIS DRAWING IS UNPUBLISHED. RELEASED FOR PUBLICATION -,- .
© COPYRIGHT - BY TYCO ELECTRONICS CORPORATION. ALL RIGHTS RESERVED.

LOC	DIST
AJ	00

REVISIONS

P	LTR	DESCRIPTION	DATE	DWN	APVD
	B	REV PER ECO 07-004710	3/2/2007	DW	KW

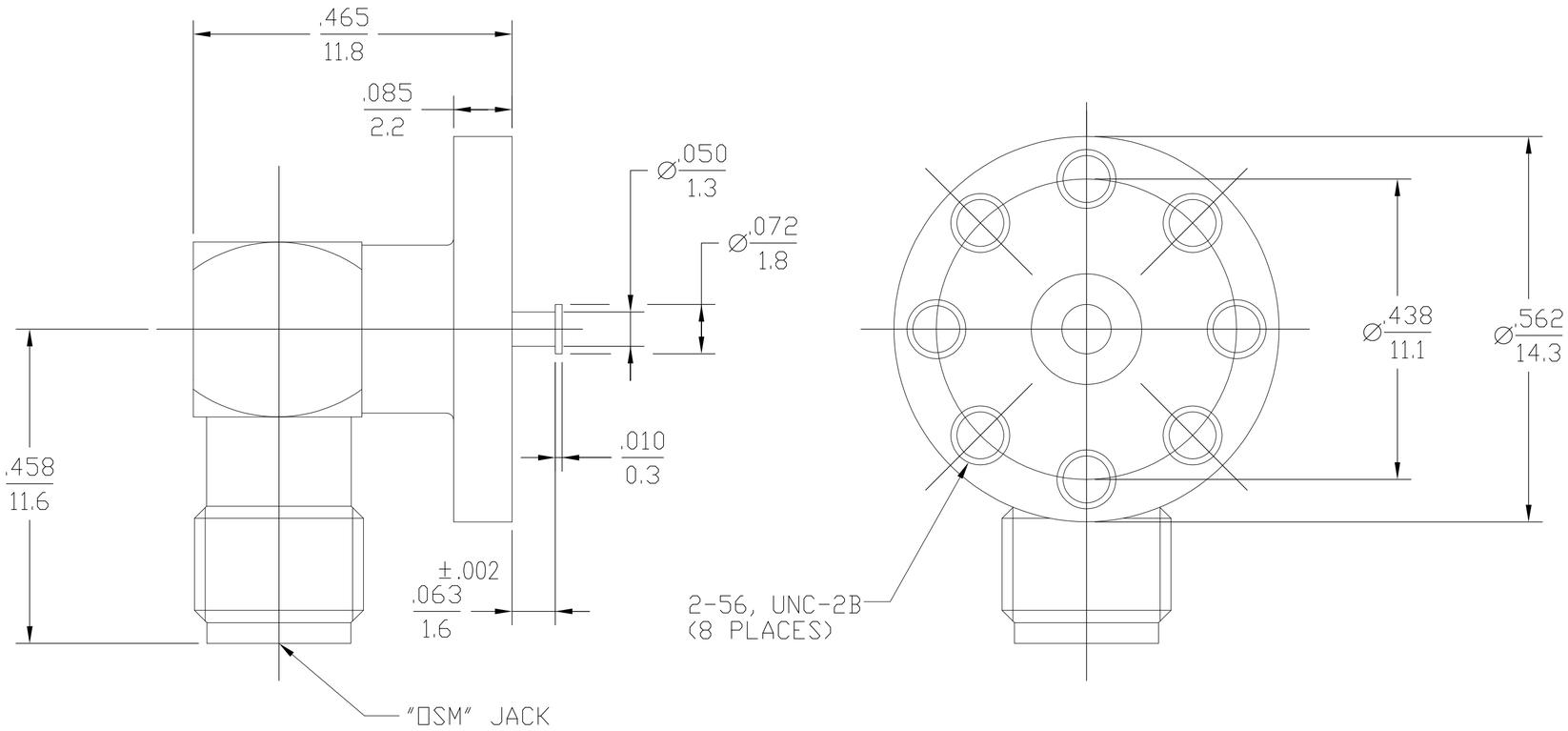

1053438

1053438-1

PART NUMBER

COMPONENT	MATERIAL	FINISH
HOUSING CAP	STAINLESS STEEL PER ASTM-A484 AND ASTM-A582, TYPE 303	GOLD PLATE PER MIL-G-45204
DIELECTRIC	TFE FLUOROCARBON PER ASTM-D-1457	N/A
CENTER CONTACT CONTACT EXT.	BERYLLIUM COPPER PER ASTM-B-196 OR ASTM-B-197, ALLOY C17300, CONDITION H OR BRASS PER ASTM-B-16	GOLD PLATE PER MIL-G-45204

NOTES:

1. DESIGNED FOR 1/16" THICK GROUND PLANE SPACING.

.XXX = in
XX.X = mm (REF)

THIS DRAWING IS A CONTROLLED DOCUMENT.

DIMENSIONS: INCHES

TOLERANCES UNLESS OTHERWISE SPECIFIED:
0 PLC ± -
1 PLC ± -
2 PLC ± -
3 PLC ± .005
4 PLC ± -
ANGLES ± 1°

MATERIAL -
FINISH -

DWN DRF 11/18/77
CHK KWW 11/18/77
APVD RMF 11/18/77
PRODUCT SPEC —
APPLICATION SPEC —
WEIGHT —

tyco Electronics
Tyco Electronics Corporation
Harrisburg, PA 17105-3608

NAME
OSM RIGHT ANGLE SURFACE LAUNCH JACK TURRET TERIMAL
—

SIZE	CAGE CODE	DRAWING NO	RESTRICTED TO
A2	00779	C-1053438	—

CUSTOMER DRAWING | SCALE 5:1 | SHEET 1 OF 1 | REV B

Downloaded From Oneyac.com

单击下面可查看定价，库存，交付和生命周期等信息

>>TE Connectivity(泰科)

Downloaded From Oneyac.com