DIESES ZEICHNUNGSDOKUMENT WIRD DURCH TE INCORPORATED KONTROLLIERT. AENDERUNGEN, DIE DEM TECHNISCHEN FORTSCHRITT DIENEN, SIND VORBEHALTEN. DEN JEWEILS LETZTGUELTIGEN AENDERUNGSSTAND ERFAHREN SIE AUF ANFRAGE.

THIS DRAWING IS A CONTROLLED DOCUMENT FOR TE INCORPORATED. IT IS SUBJECT TO CHANGE AND THE CONTROLLING ENGINEERING ORGANIZATION SHOULD BE CONTACTED FOR THE LATEST REVISION.

MATED WITH: PASSEND ZU:	LOC	DIST
-	AI	-

PROJEKT NR.: E 75-9231

REVISIONS
AENDERUNGEN

P	LTR	DESCRIPTION BESCHREIBUNG	DATE	DWN	APVD
	V	Contact pin base material change from CuSn (Phosphor bronze)to CuZn (Brass). Plating change from min. 0.8microns gold plating to min. 0.7 microns Pd Ni + 0.1 microns gold flash at contact area (Area F).	24JUN 2014	TJ	JK

POLZ.	L±0.5	BESTELL-NR.	
-	-	-	
2	5.08	825 437 -2	
3	7.62	-3	
4	10.16	-4	
5	12.70	-5	
6	15.24	-6	
7	17.78	-7	
8	20.32	-8	
9	22.86	~~-9~~	3
10	25.40	1- -0	
11	27.94	1- -1	
12	30.48	1- -2	
13	33.02	1- -3	
14	35.56	1- -4	
15	38.10	1- -5	
16	40.64	1- -6	
17	43.18	1- -7	
18	45.72	1- -8	
19	48.26	1- -9	
20	50.80	2- -0	
21	53.34	~~2- -1~~	2
22	55.88	~~2- -2~~	2
23	58.42	~~2- -3~~	2
24	60.96	2- -4	
25	63.50	2- -5	
26	66.04	2- -6	
27	68.58	~~2- -7~~	2
28	71.12	2- -8	
29	73.66	~~2- -9~~	2
30	76.20	3- -0	
31	78.74	3- -1	
32	81.28	~~3- -2~~	3
33	83.82	~~3- -3~~	2
34	86.36	~~3- -4~~	3
35	88.90	~~3- -5~~	OBSOLETE 2
36	91.44	3- -6	
37	93.98	~~3- -7~~	OBSOLETE
38	96.52	~~3- -8~~	2
39	99.06	~~3- -9~~	
40	101.60	4- -0	
41	104.14	~~4- -1~~	
42	106.68	~~4- -2~~	
43	109.22	~~4- -3~~	OBSOLETE
44	111.76	~~4- -4~~	
45	114.30	~~4- -5~~	2
46	116.84	~~4- -6~~	
47	119.38	~~4- -7~~	
48	121.92	~~4- -8~~	
49	124.46	~~4- -9~~	
50	127.00	5- 825 437 -0	

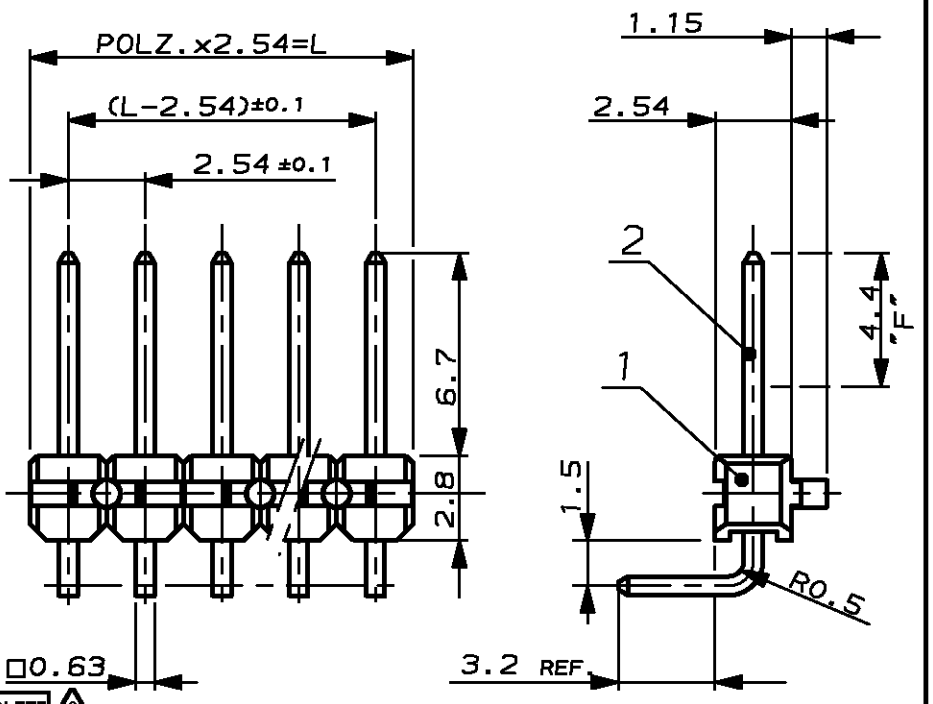

1 MATING SIDE: MIN 0.7µm PdNi + 0.1µm GOLD FLASH.
SOLDER SIDE: MIN 2.5µm TIN OVER 1.27µm NICKEL.

2 OBSOLETE PARTS: OBSOLETE CIS STREAMLINING PER D.RENAUD/D.SINISI

3 OBSOLETE

CUSTOMER PART NO	TE PART NO	REV.	PCS.	MATERIAL	SURFACE / COLOR	DESCRIPTION	ITEM NO
-	-	-	-	Cu Zn	1	CONTACT PIN KONTAKTSTIFT	2
-	-	-	-	PBT GV	GREEN GRÜN	PIN HOUSING STIFTGEHÄUSE	1

RELEASED FOR PUBLICATION FREI FUER VEROEFFENTLICHUNG KW 39/96

THIS DRAWING IS UNPUBLISHED. VERTRAULICHE UNVEROEFFENTLICHTE ZEICHNUNG. © COPYRIGHT 1975 BY TE INCORPORATED. ALL RIGHTS RESERVED. ALLE RECHTE VORBEHALTEN.

DIMENSIONS: DIMENSIONEN: mm

TOLERANCES UNLESS OTHERWISE SPECIFIED: ALLGEMEINTOLERANZEN
n. ISO 8015
n. ISO 2768 - mH -E
n. DIN 16901 - 140
0 PLC ±0.2
1 PLC ±0.2
2 PLC ±0.2
3 PLC ±-
ANGLES/WINKEL ±1°

DWN DAHLHEIMER 05.12.75
CHK BÖCK 17.12.75
APVD -

PRODUCT SPEC PRODUKTSPEZ. 108-18012
APPLICATION SPEC VERARBEITUNGSSPEZ. -
WEIGHT GEWICHT -

MATERIAL -
FINISH OBERFLAECHE/FARBE -

TE Connectivity

NAME AMPMODU II PIN HEADER, 90DEGREE, SINGLE ROW

SIZE	CAGE CODE	DRAWING NO ZEICHNUNGS-NR.	RESTRICTED TO NUR FUER
A4	00779	C-825437	-

CUSTOMER DRAWING /KUNDENZEICHNUNG | MASSSTAB 4:1 | BLATT 1 OF VON 1 | REV V

Downloaded From Oneyac.com

单击下面可查看定价，库存，交付和生命周期等信息

>>TE Connectivity(泰科)

Downloaded From Oneyac.com