THIS DRAWING IS UNPUBLISHED. RELEASED FOR PUBLICATION -,- .
© COPYRIGHT - BY TYCO ELECTRONICS CORPORATION. ALL RIGHTS RESERVED.

LOC	DIST
CM	0

REVISIONS

P	LTR	DESCRIPTION	DATE	DWN	APVD
	F1	REVISED PER ECR-18-003467	28MAR2018	BDA	SG

1. PINS TO COMPLY WITH AMP SOLDERABILITY SPEC. 108-11-3.
2. 0.00381 MIN MATTE TIN LEAD OVER 0.00127 MIN NICKEL.
3. 0.00076 MIN GOLD PLATE IN THE LOCALIZED PLATE AREA, 0.00381 MATTE TIN LEAD IN THE LOCALIZED PLATE AREA, BOTH OVER 0.00127 MIN NICKEL.
4. 0.00381 MIN MATTE TIN OVER 0.00127 MIN NICKEL.
5. 0.00076 MIN GOLD PLATE IN THE LOCALIZED PLATE AREA, 0.00381 MATTE TIN IN THE LOCALIZED PLATE AREA, BOTH OVER 0.00127 MIN NICKEL.

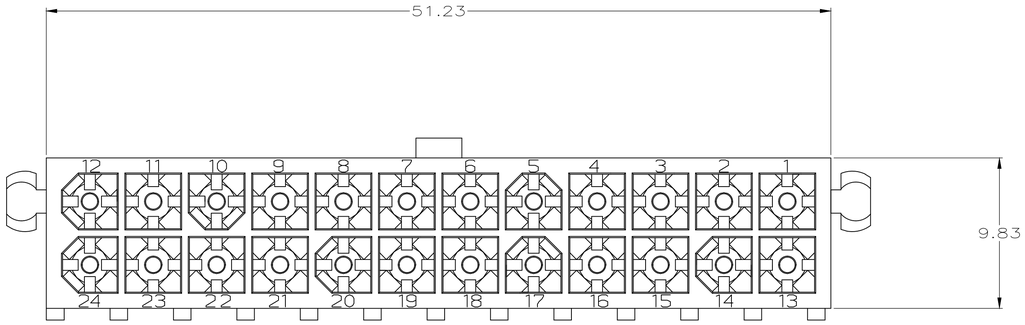

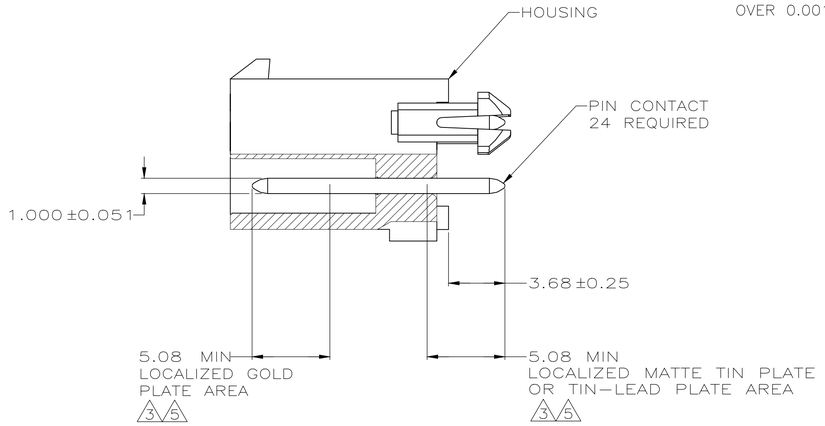

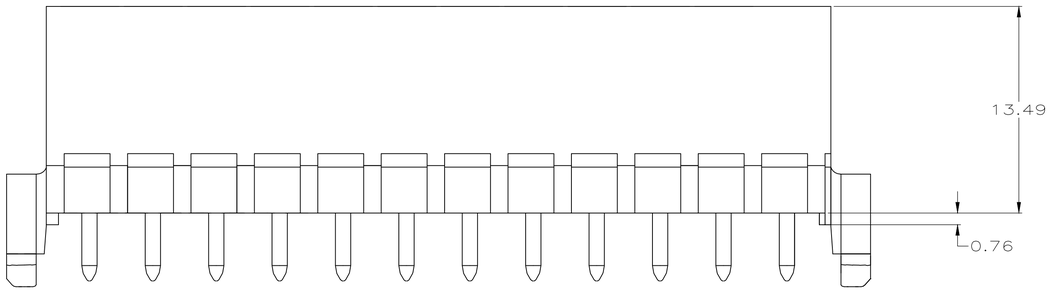

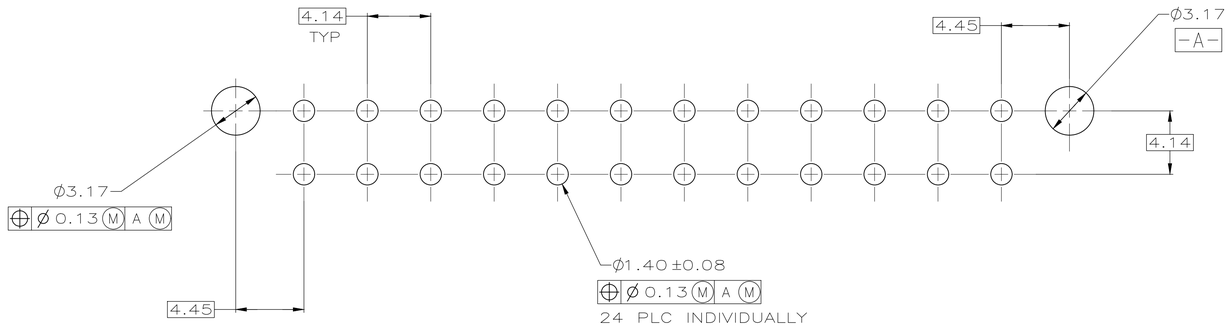

RECOMMENDED MOUNTING HOLE PATTERN
FOR 1.57 THICK P.C. BOARD

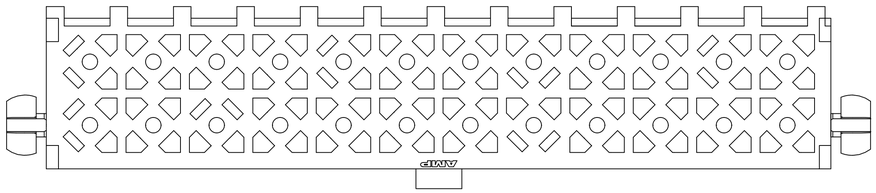

	PIN CONTACT MATERIAL AND FINISH	HOUSING MATERIAL AND COLOR	PART NUMBER
	BRASS, GOLD 5	NYLON, 94V-0, WHITE	1-794072-1
	BRASS, TIN 4	NYLON, 94V-0, WHITE	1-794072-0
OBSOLETE	BRASS, GOLD 3	NYLON, 94V-0, WHITE	~~794072-2~~
	BRASS, TIN LEAD 2	NYLON, 94V-0, WHITE	794072-1

THIS DRAWING IS A CONTROLLED DOCUMENT.

DIMENSIONS: mm

TOLERANCES UNLESS OTHERWISE SPECIFIED:
0 PLC ± -
1 PLC ± -
2 PLC ± 0.13
3 PLC ± -
4 PLC ± -
ANGLES ± -

MATERIAL -
FINISH -

DWN S CARPENTER 07JUN05
CHK R JONES 6/7/05
APVD R JONES 6/7/05
PRODUCT SPEC -
APPLICATION SPEC -
WEIGHT

TE Connectivity

NAME HEADER ASSEMBLY, 24 CIRCUIT, DOUBLE ROW VERTICAL MINI UNIVERSAL MATE-N-LOK

SIZE	CAGE CODE	DRAWING NO	RESTRICTED TO
A1	00779	C-794072	-

CUSTOMER DRAWING | SCALE 5:1 | SHEET 1 OF 1 | REV F1

AMP 4805 REV 31MAR2000

Downloaded From Oneyac.com

单击下面可查看定价，库存，交付和生命周期等信息

>>TE Connectivity(泰科)

Downloaded From Oneyac.com