THIS DRAWING IS UNPUBLISHED. RELEASED FOR PUBLICATION
© COPYRIGHT BY TYCO ELECTRONICS CORPORATION. ALL RIGHTS RESERVED.

LOC	DIST
ES	00

REVISIONS

P	LTR	DESCRIPTION	DATE	DWN	APVD
	B1	REVISED ECR-07-028230	26NOV07	A.L	S.Y

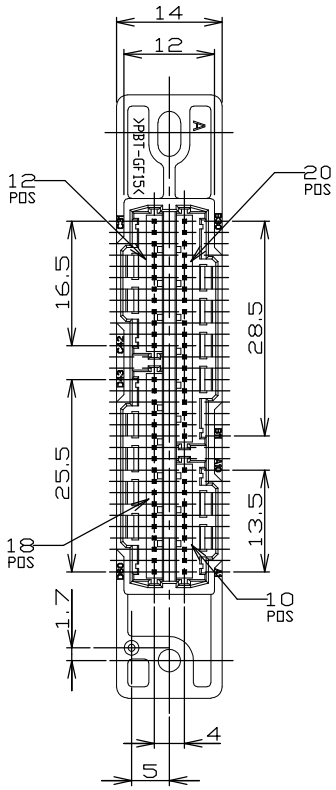

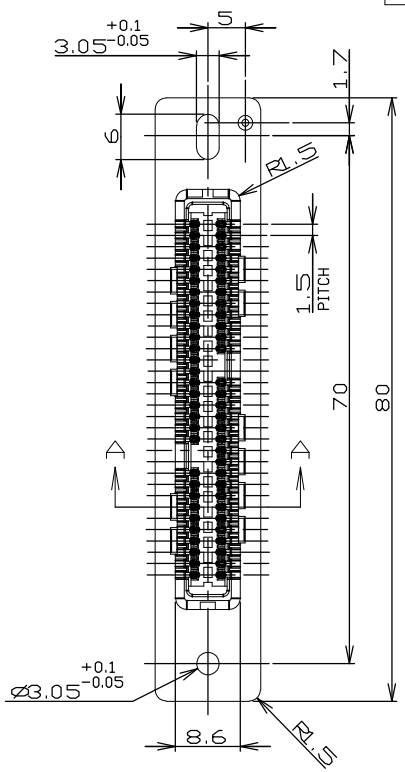

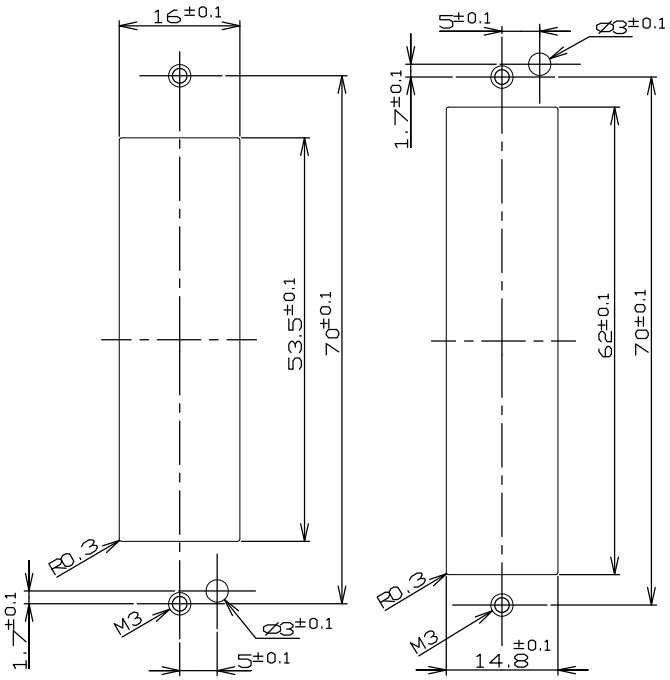

PANEL CUT DIMENSIONS
(CONNECTOR MATING SIDE)

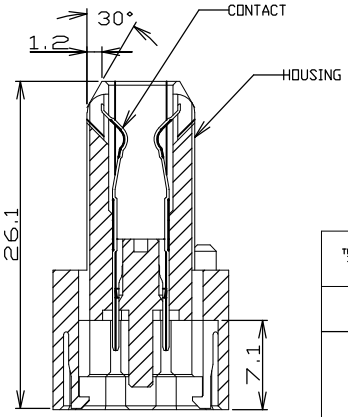

SECT A-A

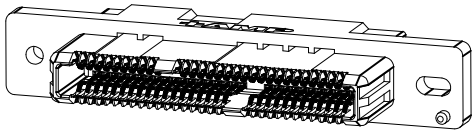

NOTES:
1. USE WITH: MT REC CONN X-353293-X
CRIMP HSG X-353908-X
CRIMP CONT 353907-1
353918-1(L/P)

2. MATERIAL:
HOUSING:PBT G.F. UL94V-0 COLOR:BLACK
CONTACT:PHOS-BRONZE

3. FINISH:
DRAWER MATING AREA:GOLD OVER NICKEL UNDERPLATE.
MINI CT MATING AREA:MATTE TIN OVER NICKEL UNDERPLATE.

4. LOCATION OF DATE CODE: AABBCD(N)
(AA: YEAR, BB: WEEK, C: DAY OF WEEK, D: DAYTIME, N: NIGHT)

6-292235-0:
AS SHOWN

TOLERANCES UNLESS OTHERWISE SPECIFIED:

10>	: ±0.2
30> * >10	: ±0.25
100> * >30	: ±0.3
ANGLE	: ±3°

THIS DRAWING IS A CONTROLLED DOCUMENT FOR TYCO ELECTRONICS CORPORATION IT IS SUBJECT TO CHANGE AND THE CONTROLLING ENGINEERING ORGANIZATION SHOULD BE CONTACTED FOR THE LATEST REVISION.

DIMENSIONS: mm

TOLERANCES UNLESS OTHERWISE SPECIFIED:

0 PLC	±
1 PLC	±0.1
2 PLC	±0.01
3 PLC	±0.001
4 PLC	±0.0001
ANGLES	±

MATERIAL SEE NOTE 2

FINISH SEE NOTE 3

DWN	S.XU	31JAN03
CHK	S.YAO	31JAN03
APVD	T.SASAKI	31JAN03
PRODUCT SPEC	—	
APPLICATION SPEC	—	
WEIGHT	15.0g	

WIRE RANGE | INSULATION DIA

Tyco Electronics
Tyco Electronics Corporation
Shanghai, PRC

NAME
REC ASS'Y for DC TYPE 60 POS.
1.5mm PITCH MINI CT DRAWER CONNECTOR

SIZE	CAGE CODE	DRAWING NO	RESTRICTED TO
A3	00779	C- 292235	

CUSTOMER DRAWING | SCALE NON | SHEET 1 OF 1 | REV B1

AMP 1470-19 REV 31MAR2000

Downloaded From Oneyac.com

单击下面可查看定价，库存，交付和生命周期等信息

>>TE Connectivity(泰科)

Downloaded From Oneyac.com