THIS DRAWING IS UNPUBLISHED. RELEASED FOR PUBLICATION -.-
© COPYRIGHT - BY TYCO ELECTRONICS CORPORATION. ALL RIGHTS RESERVED.

LOC	DIST
GP	00

REVISIONS

P	LTR	DESCRIPTION	DATE	DWN	APVD
	P	REVISED PER ECO-08-007327	17APR08	BM	WM

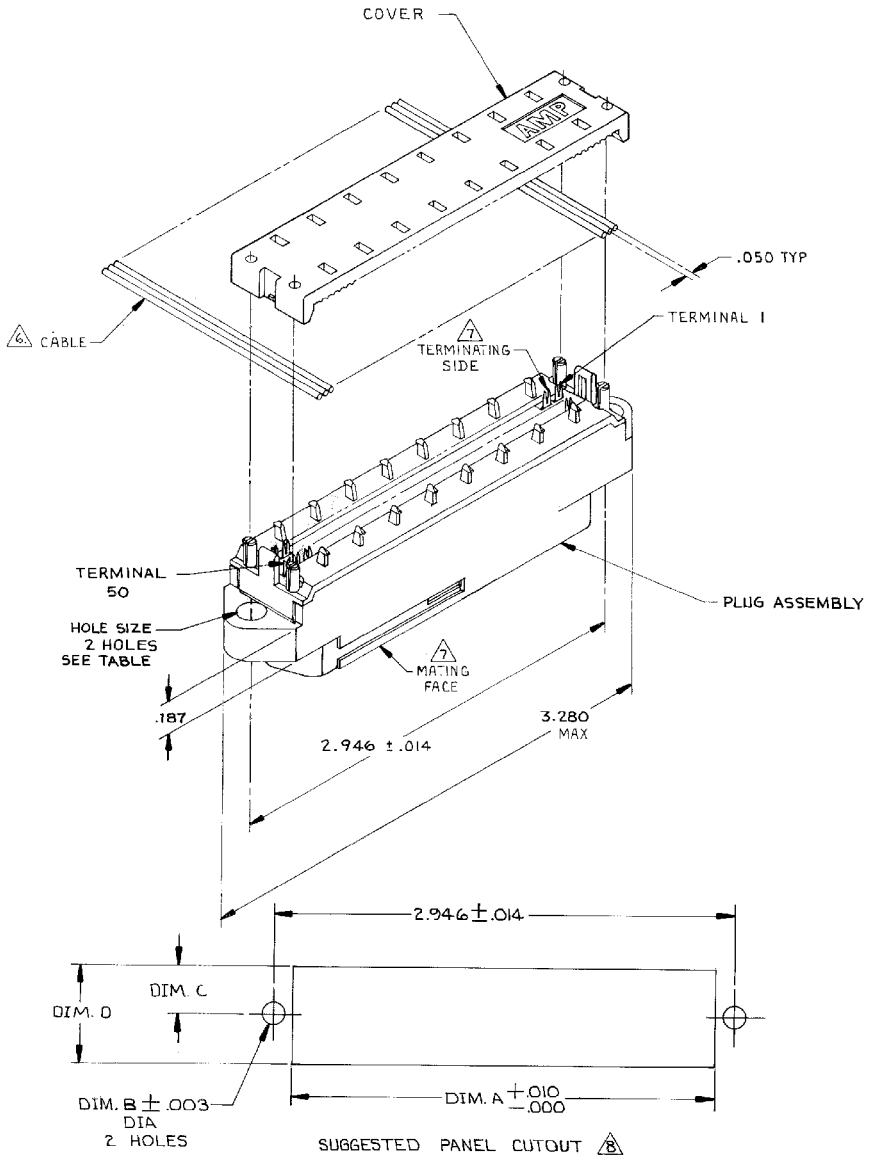

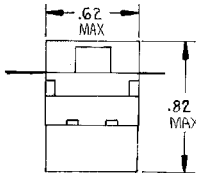

END VIEW

1. THE CONTACT SURFACES OF THE TERMINALS ARE COATED WITH LUBRICANT.

2. MATERIAL:
HOUSING & COVER – THERMOPLASTIC, BLACK.
TERMINALS – PHOS BRONZE PLATED WITH EITHER .000030 MINIMUM GOLD PLATE OR GOLD FLASH OVER PALLADIUM NICKEL PLATE, .000030 MIN TOTAL ON MATING SURFACE. GOLD FLASH PLATED ON TERMINATING SIDE. .000050 MINIMUM NICKEL UNDERPLATE OVER ENTIRE TERMINAL.

3. COVER SHOWN LOOSE BUT SHIPPED ASSEMBLED.

4. WIRE RANGE: 26 AWG SOLID THRU 30 AWG SOLID AND 28 AWG STRANDED RIBBON CABLE.

5. ALL DIMENSIONS SHOWN ARE FOR REFERENCE ONLY UNLESS OTHERWISE SPECIFIED.

6. FLAT CABLE SHALL BE FURNISHED BY CUSTOMER.

7. MATING FACE CONSISTS OF TWO ROWS OF TERMINALS ON .085 CENTERS. TERMINATING SIDE CONSISTS OF TERMINALS ON .100 CENTERS FOR AN EFFECTIVE .050 TERMINATION.

8. PANEL THICKNESS RANGE:
FRONT PANEL MOUNTING – .125 MAX
REAR PANEL MOUNTING – .062 MAX

9. FOR MORE INFORMATION REFER TO AMP PRODUCT SPECIFICATION 108-6076 & APPLICATION SPEC 114-6030.

554105

DIM D	DIM C	DIM B	DIM A	DESCRIPTION
.620	.310	.149	2.700	REAR PANEL MOUNTING
.640	.320	.126	2.700	FRONT PANEL MOUNTING

HOLE SIZE	PACKAGED	COVER	PART NUMBER
.192 – .182	100 PER TRAY	3	554105-1

THIS DRAWING IS A CONTROLLED DOCUMENT.

DIMENSIONS: INCHES

TOLERANCES UNLESS OTHERWISE SPECIFIED:
0 PLC ± –
1 PLC ± –
2 PLC ± –
3 PLC ± –
4 PLC ± –
ANGLES ± –

MATERIAL 2

FINISH 2

DWN Z. REAM 19/MAR/07
CHK W. MILLHIMES 19/MAR/07
APVD W. MILLHIMES 19/MAR/07

PRODUCT SPEC

APPLICATION SPEC

WEIGHT –

CUSTOMER DRAWING

Tyco Electronics
Tyco Electronics Corporation
Harrisburg, PA 17105-3608

NAME
PLUG ASSEMBLY, 50 POSITION
PANEL MOUNTING, LOW PROFILE,
CHAMP LATCH

SIZE	CAGE CODE	DRAWING NO	RESTRICTED TO
A2	00779	C-554105	–

SCALE 2:1 SHEET 1 OF 1 REV P

AMP 1471-9 REV 31MAR2000

Downloaded From Oneyac.com

单击下面可查看定价，库存，交付和生命周期等信息

>>TE Connectivity(泰科)

Downloaded From Oneyac.com