THIS DRAWING IS UNPUBLISHED. RELEASED FOR PUBLICATION -,- .
© COPYRIGHT - BY TYCO ELECTRONICS CORPORATION, ALL RIGHTS RESERVED.

LOC	DIST
GP	00

REVISIONS

P	LTR	DESCRIPTION	DATE	DWN	APVD
	A	REVISED (ECR-12-018088)	27MAR2013	BW	HK

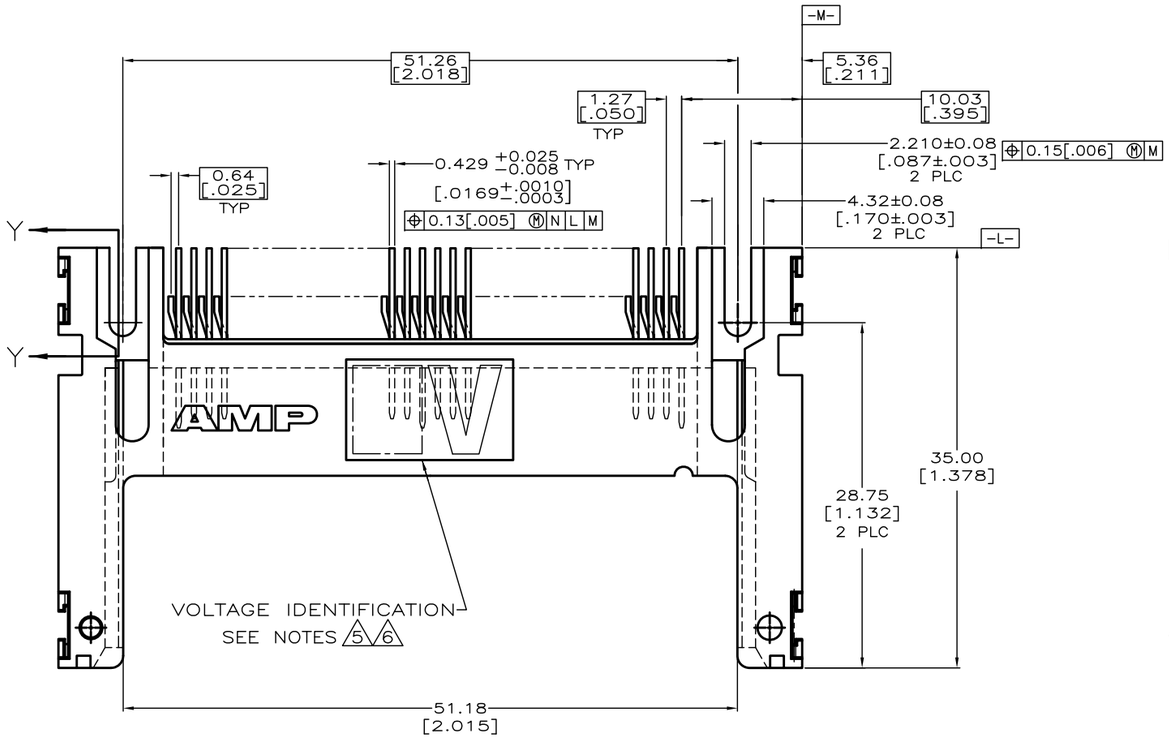

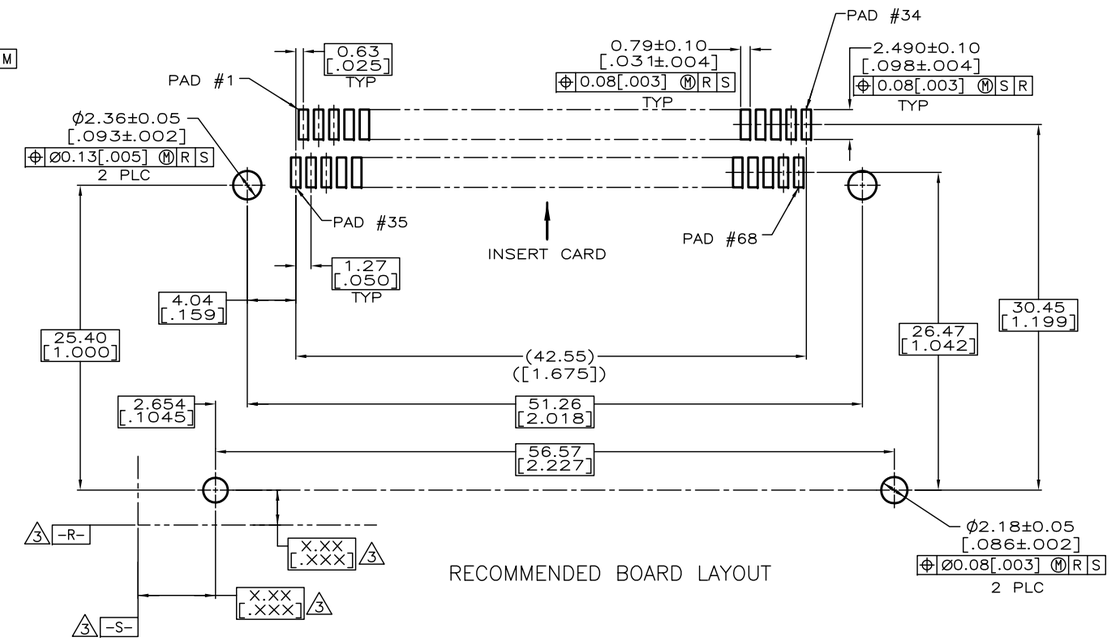

RECOMMENDED BOARD LAYOUT

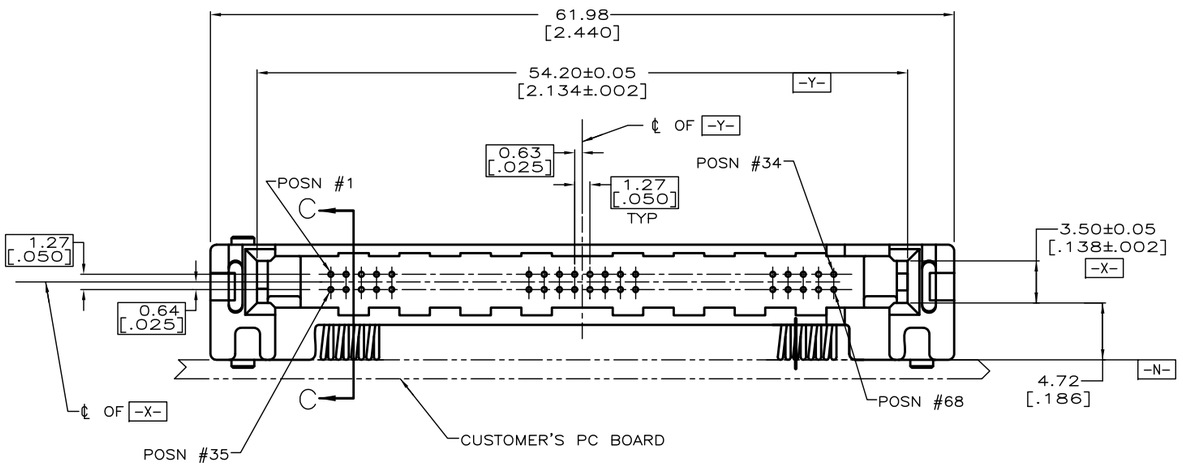

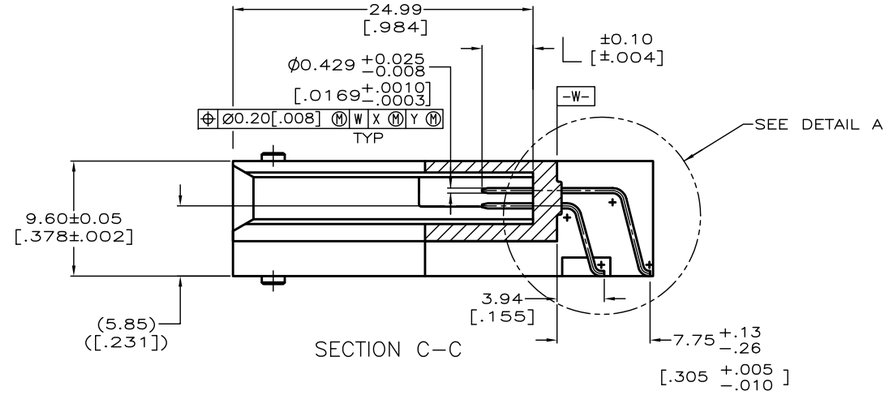

SECTION C–C

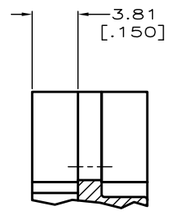

SECTION Y–Y

1. PIN:
   0.00076[.000030] MINIMUM GOLD IN CONTACT AREA,
   0.00381[.000150] MIN TIN ON SOLDER TAILS,
   ALL OVER 0.00127[.000050] MINIMUM NICKEL
2. CUSTOMER TO PROVIDE CARD GUIDANCE SYSTEM
3. DATUMS AND BASIC DIMENSIONS ESTABLISHED BY CUSTOMER
4. CONNECTOR REQUIRES USE OF 2 – SIZE 2M SCREWS FOR FASTENING TO PRINTED CIRCUIT BOARD
5. ASSEMBLY KEYED FOR 5 VOLT CARDS
6. ASSEMBLY KEYED FOR LOW VOLT CARDS (3.3V)
7. PACKAGED IN TRAYS, 9 X 17 INCH APPROXIMATE SIZE.
8. PACKAGED IN TRAYS, 9 X 12 INCH APPROXIMATE SIZE.
9. PACKAGED IN TAPE & REEL.
10. MATERIAL:
    HOUSING: LCP
    COLOR; BLACK
    PIN: BRASS
11. OBSOLETE PARTS: OBSOLETE CIS STREAMLINING PER D.RENAUD/D.SINISI

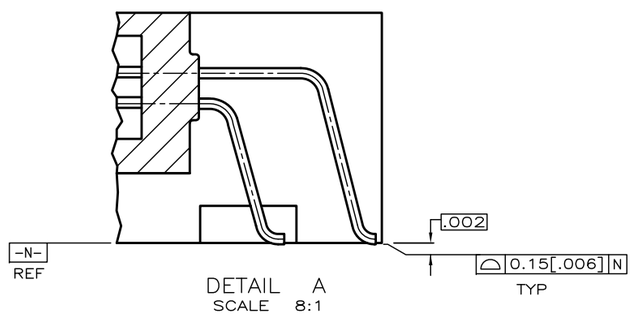

DETAIL A
SCALE 8:1

OBSOLETE 11	9	6	1,17,34 35,51,68	ALL OTHER PINS	36,67	~~5535657-5~~
	9	5	1,17,34 35,51,68	ALL OTHER PINS	36,67	~~5535657-4~~
	8	5	1,17,34 35,51,68	ALL OTHER PINS	36,67	~~5535657-3~~
	8	6	1,17,34 35,51,68	ALL OTHER PINS	36,67	5535657-2
	7	5	1,17,34 35,51,68	ALL OTHER PINS	36,67	5535657-1
PACKAGING	VOLTAGE KEYING & IDENTIFICATION		5.0 [.197]	4.25 [.167]	3.5 [.138]	PART NUMBER
			"L" (PIN LENGTH) AND LOCATION			

COPYRIGHT 2005
TE CONNECTIVITY CORP
ALL RIGHTS RESERVED

THIS DRAWING IS A CONTROLLED DOCUMENT.

DIMENSIONS: mm [INCHES]

TOLERANCES UNLESS OTHERWISE SPECIFIED:
0 PLC ± –
1 PLC ± –
2 PLC ± –
3 PLC ± –
4 PLC ± –
ANGLES ± °

MATERIAL 10 FINISH 1

DWN L. VARELA – DOCK5 03-28-05
CHK D.L. GORENC 03-28-05
APVD M. WALMSLEY 03-28-05
PRODUCT SPEC –
APPLICATION SPEC –
WEIGHT 7.7 GRAMS
CUSTOMER DRAWING

TE Connectivity

NAME: PIN HEADER ASSY, 68 POSN, RAISED HT, TOP BD MTG, SURFACE MT, AMP MEMORY CARD

SIZE	CAGE CODE	DRAWING NO	RESTRICTED TO
A1	00779	C-5535657	–

SCALE 4:1 SHEET 1 OF 1 REV A

Downloaded From Oneyac.com

单击下面可查看定价，库存，交付和生命周期等信息

>>TE Connectivity(泰科)

Downloaded From Oneyac.com