THIS DRAWING IS UNPUBLISHED. RELEASED FOR PUBLICATION -,- .
© COPYRIGHT - BY TYCO ELECTRONICS CORPORATION. ALL RIGHTS RESERVED.

LOC	DIST
AD	00

REVISIONS

P	LTR	DESCRIPTION	DATE	DWN	APVD
	C1	REV PER ECO-20-004668	08JUN2020	ML	SZ

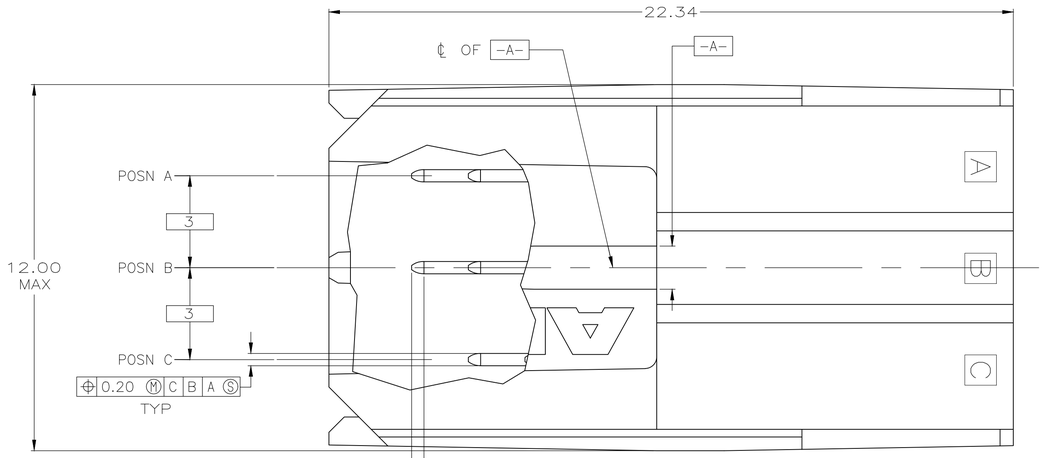

1. MATERIAL: HOUSING: POLYESTER. COLOR: GRAY. UL 94V-O.
   CONTACT: COPPER ALLOY.
2. FINISH: IN ACCORDANCE WITH PRODUCT SPECIFICATION 108-1651, GOLD PLATING OR EQUIVALENT PLATING ON PRODUCT CONTACT MATING AREA, AND MATTE TIN PLATING ON COMPLIANT PIN AREA, ALL OVER MATTE NICKEL UNDERPLATED. DETAIL PLEASE REFER TO PRODUCT SPECIFICATION 108-1651.
3. FINISH: CONTACT LUBRICATION WITH BELLCORE APPROVED LUBRICANT. TECHNICAL REFERENCE: TR-NWT-001217 ISSUE 1, SEPT 1992.
4. REFERENCE APPLICATION SPEC 114-1103 FOR RECOMMENDED PLATED THRU HOLE DIAMETER AND PLATING THICKNESS.
5. CURRENT RATING 10A/CONTACT PER PRODUCT SPEC 108-1651.

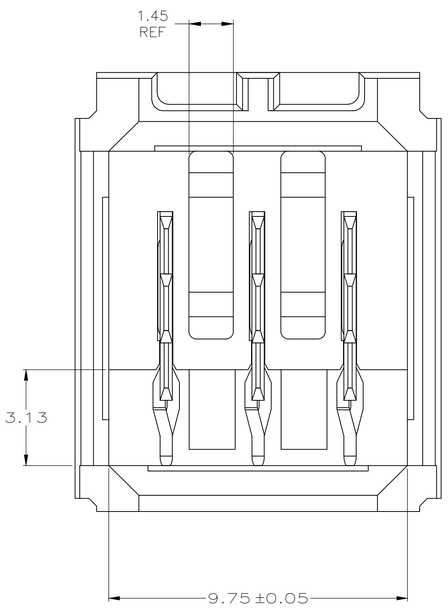

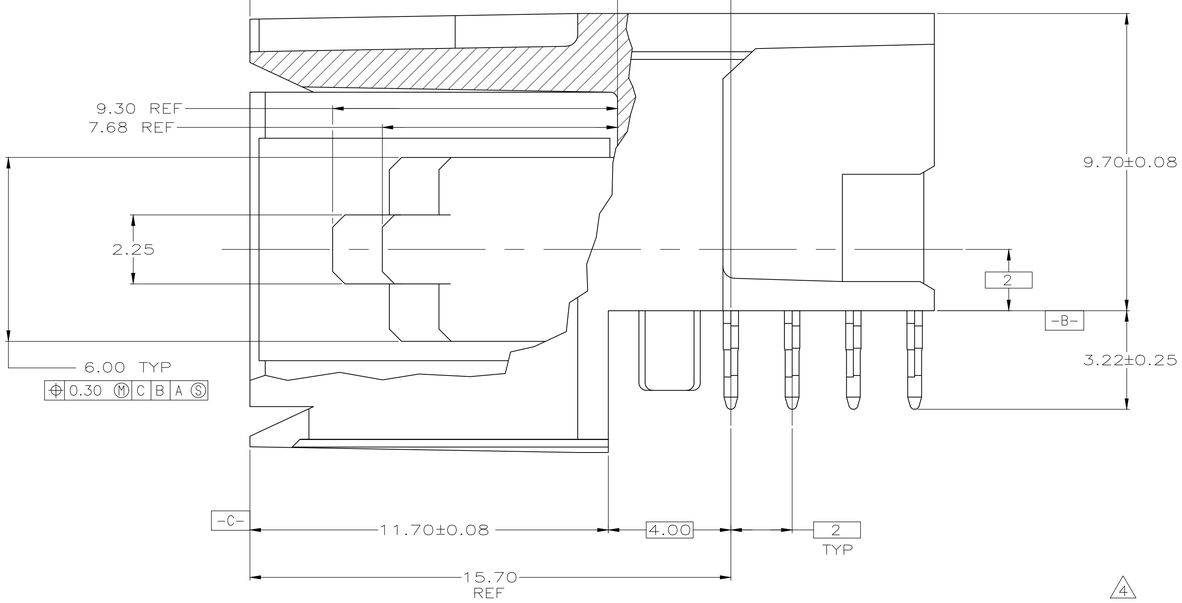

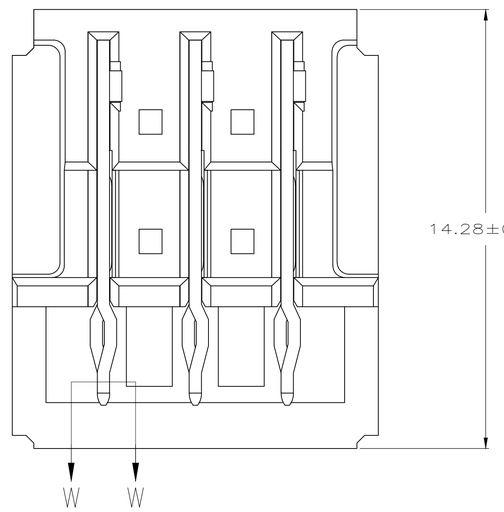

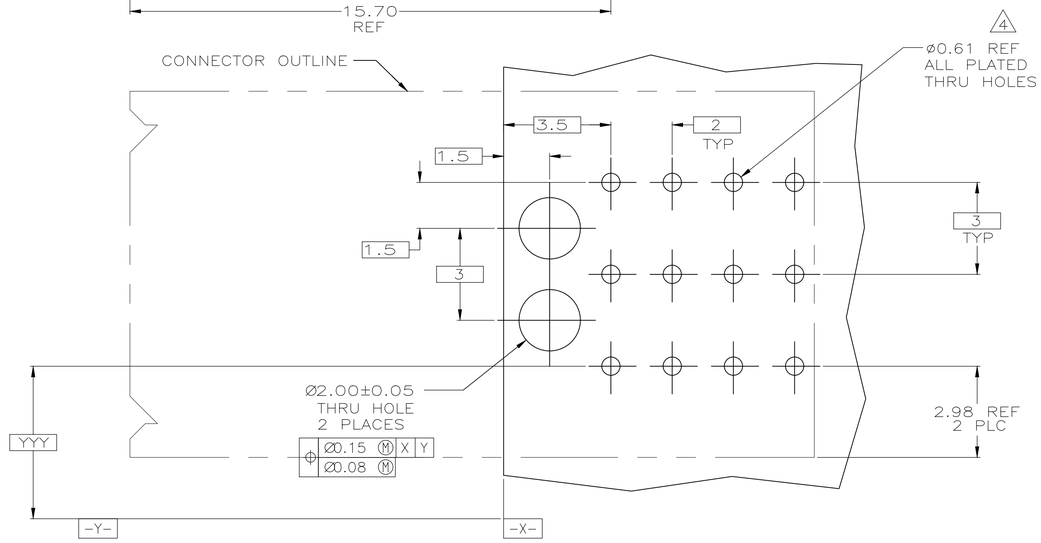

RECOMMENDED PCB HOLE LAYOUT

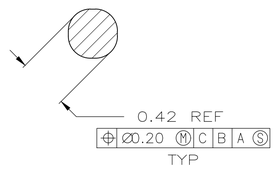

SECTION W-W
SCALE 40:1

5223981-1
PART NUMBER

THIS DRAWING IS A CONTROLLED DOCUMENT.	DWN R.CARBO 13DEC04	Tyco Electronics	Tyco Electronics Corporation Harrisburg, Pa 17105-3608
DIMENSIONS: mm	CHK R.PATTERSON 13DEC04	NAME	ASSEMBLY, RIGHT ANGLE HEADER, W/ RETENTION PEGS, UNIVERSAL POWER MODULE
TOLERANCES UNLESS OTHERWISE SPECIFIED: 0 PLC ± - 1 PLC ± - 2 PLC ± 0.13 3 PLC ± - 4 PLC ± - ANGLES ± -	APVD R.PATTERSON 13DEC04	PRODUCT SPEC 108-1651	
		APPLICATION SPEC 114-1103	SIZE A1 / CAGE CODE 00779 / DRAWING NO C-5223981 / RESTRICTED TO —
MATERIAL 1	FINISH 2 3	WEIGHT —	
		CUSTOMER DRAWING	SCALE 10:1 / SHEET 1 OF 1 / REV C1

AMP 4805 REV 31MAR2000

Downloaded From Oneyac.com

单击下面可查看定价，库存，交付和生命周期等信息

>>TE Connectivity(泰科)

Downloaded From Oneyac.com