THIS DRAWING IS UNPUBLISHED. RELEASED FOR PUBLICATION 20-
© COPYRIGHT 20- BY TYCO ELECTRONICS CORPORATION. ALL RIGHTS RESERVED.

LOC AA DIST 00

REVISIONS

P	LTR	DESCRIPTION	DATE	DRN	APVD
	E	REV PER ECO-10-019136	19SEP2010	RZ	KZ
	F	ECO-10-023374	28OCT2010	RL	KZ

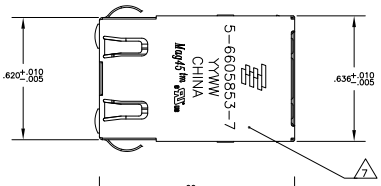

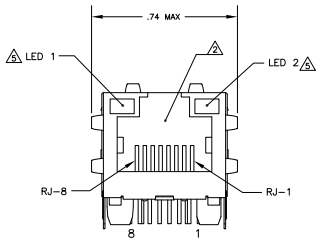

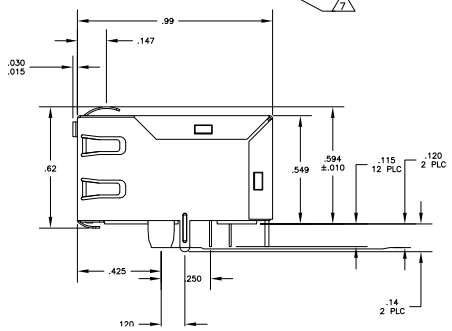

ELECTRICAL:

714P10 MAGNETIC SCHEMATIC 3 6

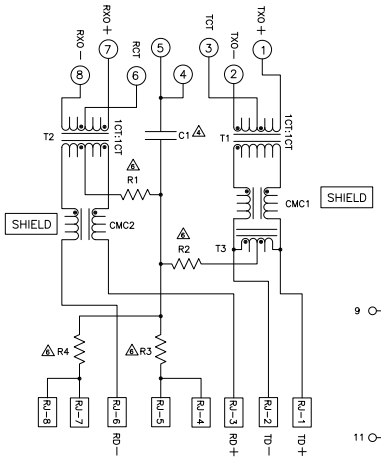

C1=1000pF. 2kV DECOUPLING CAPACITOR
R1-R4 = 75 OHMS, 1/16 W RESISTORS

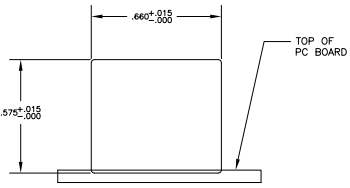

SUGGESTED PANEL CUTOUT

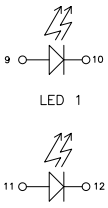

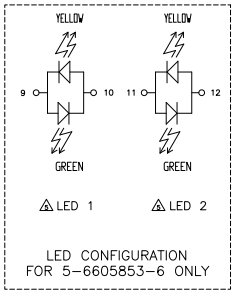

LED CONFIGURATION
FOR 5-6605853-6 ONLY

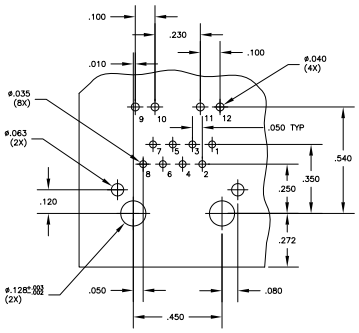

SUGGESTED PC BOARD LAYOUT
(Component Side)

ONLY FOR 1-6605853-9

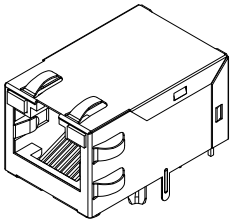

1. MATERIALS:
HOUSING - THERMOPLASTIC PET POLYESTER FLAMMABILITY RATING UL 94V-0.
SHIELD - .010" THICK, C26800 BRASS PREPLATED WITH 30µINCH MIN SEMI-BRIGHT
NICKEL, SOLDER TABS POST-DIPPED WITH SAC SOLDER.
MOD JACK CONTACTS - .0157" x .018" PHOSPHOR BRONZE, 50µINCH MIN OVERALL NICKEL UNDERPLATE, WITH SELECT 50µINCH MIN HARD GOLD FINISH PLATE. SOLDERTAILS WITH 100µINCH MIN MATTE TIN AND/OR SAC SOLDER DIP
LIGHT EMITTING DIODE(LED) - DIFFUSED EPOXY LENS, .020" x .020"
CARBON STEEL WIREFRAME LEADS PREPLATED WITH 80µINCH SILVER OVER 40µINCH NICKEL UNDERPLATE OVER 40µINCH COPPER UNDERPLATE; POST-PLATED WITH 100µINCH MIN MATTE TIN AND/OR SAC SOLDER DIP OR PURE TIN SOLDER DIP.

2. RJ45 JACK CAVITY CONFORMS TO FCC RULES AND REGULATIONS PART 68, SUB PART F.

3. MAGNETICS
-APPLICATION: 10/100 BASE-T
-IMPEDANCE: 100 OHMS
-TURNS RATIO (CHIP:CABLE): TX = 1:1, RX = 1:1
-OPEN CIRCUIT INDUCTANCE (OCL): 350µH MIN @100kHz, 0.1VRMS, 8mADC BIAS FROM 0°C TO 70°C, TX AND RX
-PERFORMANCE @ 25°C:
INSERTION LOSS (IL): 1.1dB MAX FROM 0.5MHz TO 100MHz
RETURN LOSS (RL): 18dB MIN FROM 0.5MHz TO 30MHz
18-20LOG(f/30)dB MIN FROM 30.1MHz TO 60MHz
12dB MIN FROM 60.1MHz TO 80MHz
CROSSTALK ATTENUATION: 35dB MIN FROM 0.5MHz TO 40MHz
33-20LOG(f/50)dB MIN FROM 40.1MHz TO 100MHz
COMMON MODE REJECTION RATIO (CMRR): 30dB MIN FROM 0.5MHz TO 100MHz
-ISOLATION VOLTAGE: COMPLIES WITH IEEE802.3 2002, PARA 23.5.1.1, ITEM b.

4. OPERATING TEMPERATURE: FROM 0°C TO +70°C.

5. LEDS ARE DRIVEN WITH CONSTANT CURRENT AT APPROX 20mA.
LED COLOR: DOMINANT WAVELENGTH (λD): GREEN 568 nm TYP @ IF=20mA
FORWARD VOLTAGE (VF): GREEN 2.2V TYP @ IF=20mA
DOMINANT WAVELENGTH (λD): YELLOW 588 nm TYP @ IF=20mA
FORWARD VOLTAGE (VF): YELLOW 2.1V TYP @ IF=20mA.

6. INDICATED CONNECTIONS ARE FOR NIC CONFIGURATION. THE MAGNETICS ARE ASYMMETRIC, AND DO NOT SUPPORT AUTO-MDI/MDIX.

7. TYCO ELECTRONICS LOGO, PART NUMBER, DATE CODE, COUNTRY OF ORIGIN AND AGENCY APPROVAL MARKING IN APPROXIMATE LOCATION SHOWN.

8. THESE PARTS ARE RECOMMENDED FOR WAVE SOLDERING PROCESS, PREHEAT TEMPRATURE IS 120°C TO 160°C, 120 SECONDS TO 180 SECONDS, PEAK SOLDERING TEMPERATURE IS 260 °C MAX, 10 SECONDS MAX.

EMI FINGER	LED 1	LED 2	PART NUMBER
YES	GREEN	YELLOW	5-6605853-8
YES	GREEN	GREEN	5-6605853-7
YES	GREEN/YELLOW	GREEN/YELLOW	5-6605853-6
NO	YELLOW	GREEN	1-6605853-9

THIS DRAWING IS A CONTROLLED DOCUMENT.
DIMENSIONS: INCHES
TOLERANCE UNLESS OTHERWISE SPECIFIED:
0 PLC ± -
1 PLC ± .1
2 PLC ± .01
3 PLC ± .005
4 PLC ± .0005
ANGLES ± -
MATERIAL 1
FINISH 1

DR D. GILLETTE 31AUG2005
DE D. FAROLE 31AUG2005
APD S. FLICKINGER 31AUG2005
PRODUCT SPEC 108-2100
APPLICATION SPEC -
WEIGHT -

Tyco Electronics Corporation
ChinaPing, China

NAME INTEGRATED MAGNETIC MOD JACK ASSY, 1x1 MAG45(TM), SHLD, 6 WAVE PNL GNDS, W/REAR LED LEADS, 714P10 MAGNETIC CIRCUIT

SIZE A1 CAGE CODE 00779 DRAWING NO C-6605853 RESTRICTED TO -

CUSTOMER DRAWING SCALE NTS SHEET 1 OF 1 REV F

Downloaded From Oneyac.com

单击下面可查看定价，库存，交付和生命周期等信息

>>TE Connectivity(泰科)

Downloaded From Oneyac.com