THIS DRAWING IS UNPUBLISHED. RELEASED FOR PUBLICATION ,19 .
© COPYRIGHT 19 BY AMP INCORPORATED. ALL RIGHTS RESERVED.

LOC	DIST
DF	F0

REVISIONS

P	LTR	DESCRIPTION	DATE	DWN	APVD
	0	RELEASED PER 0G3D-0497-00	10-00	CT	DM

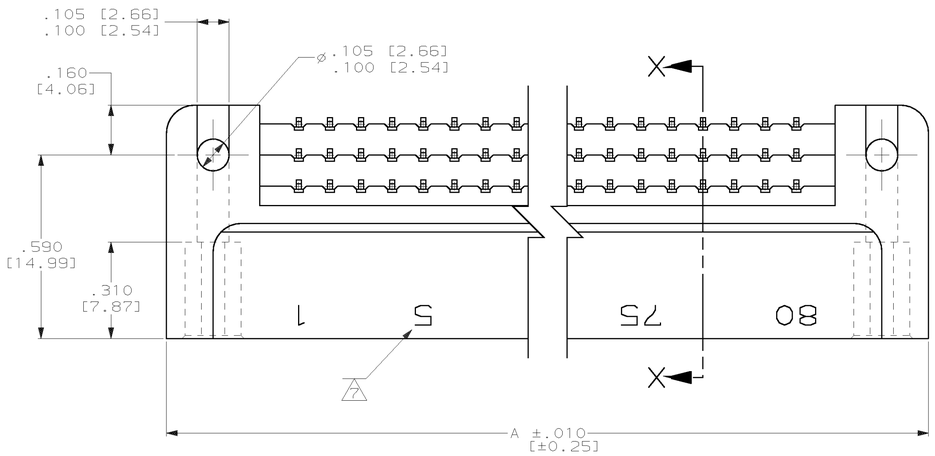

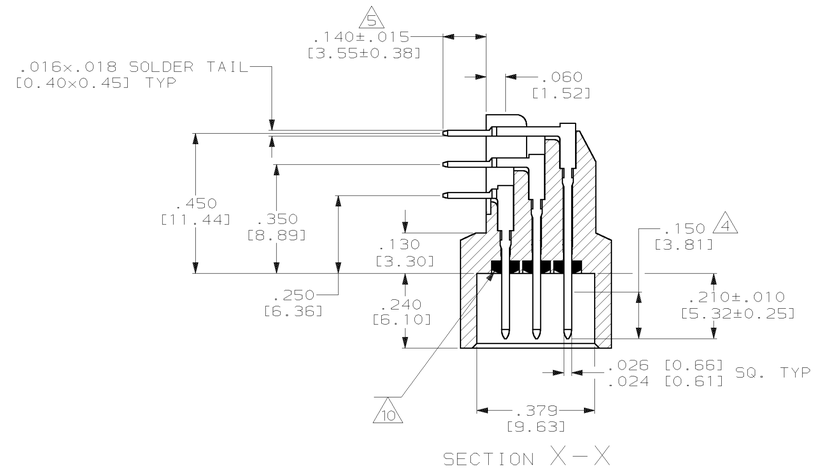

SECTION X–X

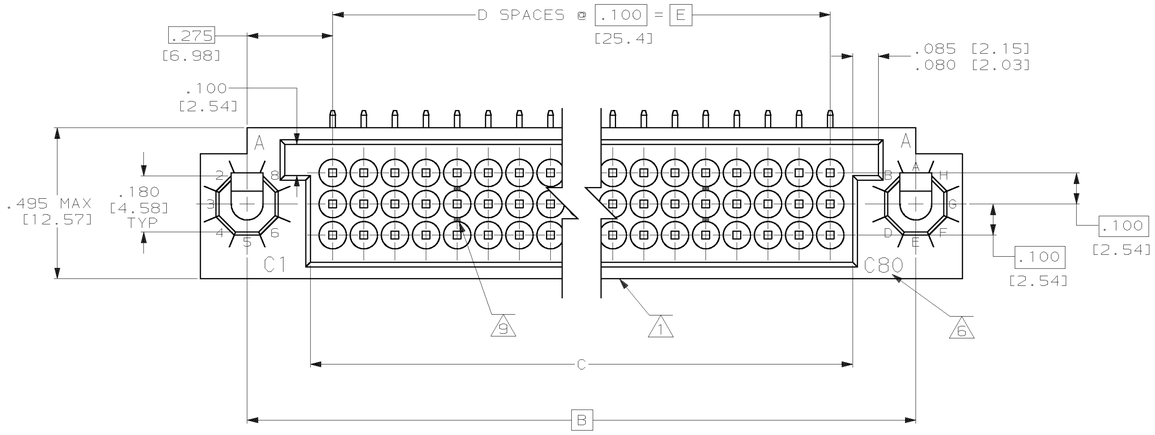

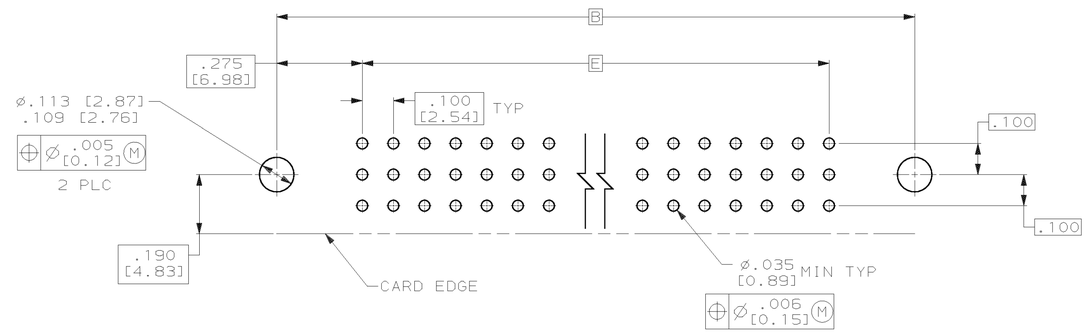

RECOMMENDED P.C. BOARD LAYOUT

1. CUSTOMER PART NO., 00779, DATE CODE, PART NO. AND "AMP" MARKED ON THIS SIDE.
2. HOUSING MAT'L: POLYPHENYLENE SULFIDE, GST-40F PER MIL-M-24519.
3. CONTACT MAT'L: BRASS PER QQ-B-626.
4. CONTACT FINISH: .000050" [0.00127] GOLD OVER .000050" [0.00127] NICKEL IN CONTACT AREA.
5. CONTACT FINISH: .000100" [0.00254] TIN-LEAD OVER .000050" [0.00127] NICKEL
6. LETTERS INDICATING OUTSIDE ROWS AND NUMBERS INDICATING END CAVITIES (ROW C ONLY) MARKED ON THIS SURFACE.
7. NUMBERS INDICATING EVERY FIVE CAVITIES MARKED ON BOTH SIDES.
8. MEETS ALL REQUIREMENTS OF MIL-C-55302.
9. LINES INDICATING EVERY FIVE CAVITIES MARKED ON MATING FACE, EXCEPT END CAVITIES, STARTING AT POSN. #1.
10. EPOXY SEALANT TO PREVENT WICKING OF FLUXES AND CONFORMAL COATING INTO THE CONTACT ENGAGEMENT AREA.

93346-1452737-1	6.400 [162.56]	64	6.544 [166.21]	6.950 [176.53]	7.250 [184.15]	195	1218575-1
CUSTOMER PART NO.	E	D	C	B	A	POSN.	PART NO.

THIS DRAWING IS A CONTROLLED DOCUMENT.

DIMENSIONS: INCHES [mm]

TOLERANCES UNLESS OTHERWISE SPECIFIED:
0 PLC ±-
1 PLC ±-
2 PLC ±-
3 PLC ±.005 [0.13]
4 PLC ±-
ANGLES ±-

MATERIAL 2 3
FINISH 4 5

DWN C.C.THOMAS 10/19/00
CHK D.MILLER 10-24-00
APVD D.MILLER 10-24-00
PRODUCT SPEC –
APPLICATION SPEC –
WEIGHT –

AMP Incorporated
Harrisburg, PA 17105-3608

NAME PIN HEADER ASSY, RIGHT ANGLE, SEALED WITH MOUNTING EARS

SIZE	CAGE CODE	DRAWING NO	RESTRICTED TO
A1	00779	C- 1218575	–

CUSTOMER DRAWING SCALE 4:1 SHEET 1 OF 1 REV 0

AMP 4805 REV 11JUN97

Downloaded From Oneyac.com

19-OCT-00 08:27:39 amp16412 /home/amp16412/edmmod

单击下面可查看定价，库存，交付和生命周期等信息

>>TE Connectivity(泰科)

Downloaded From Oneyac.com