© – TE Connectivity. All Rights Reserved.

REVISIONS					
P	LTR	DESCRIPTION	DATE	DWN	APVD
	M4	REVISED PER ECN-21-122181	18OCT2021	RZ	WK

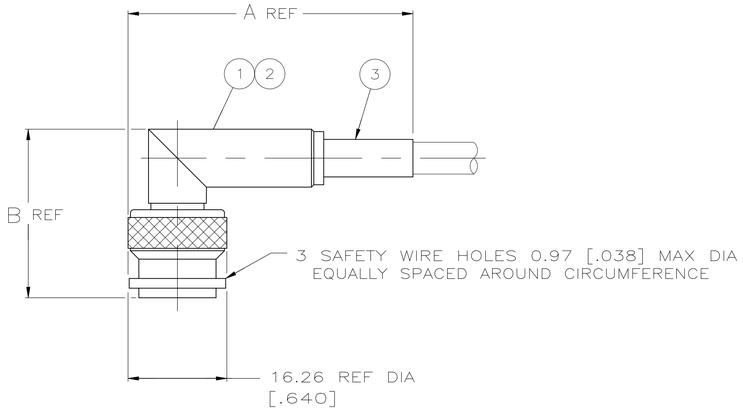

VIEW Y

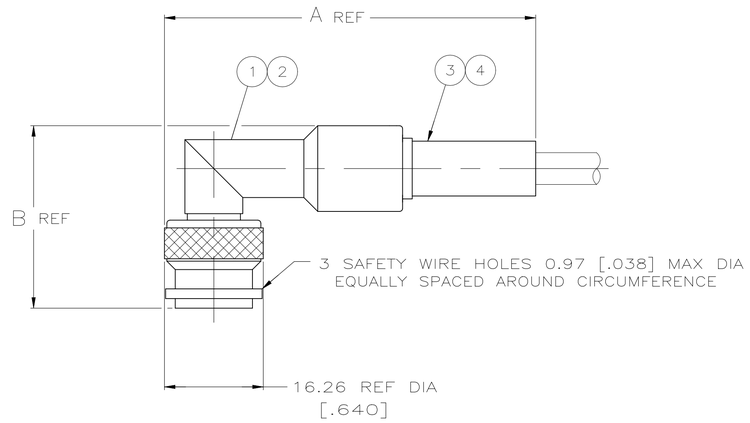

VIEW Z

1 FELECA F1703/94 AND FILOTEX 50 MFCFB

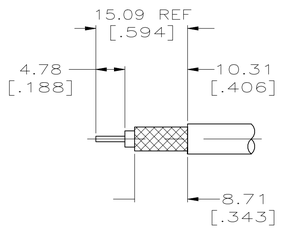

VIEW U
RECOMMENDED
STRIP LENGTH

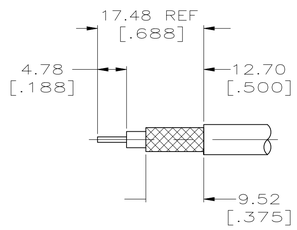

VIEW V
RECOMMENDED
STRIP LENGTH

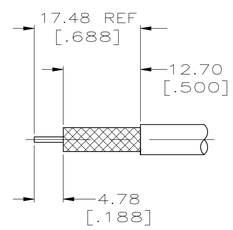

VIEW W
RECOMMENDED
STRIP LENGTH

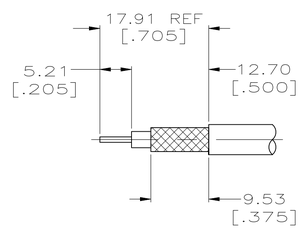

VIEW X
RECOMMENDED
STRIP LENGTH

	CABLE SIZE	CRIMP TOOL	B	A	VIEW	4 SEAL QTY=1	3 FERRULE QTY=1	2 CONTACT QTY=1	1 PLUG ASSY QTY=1	PART NUMBER
SUPERSEDED BY 1-5225349-1	1	220015-6	29.97 [1.180]	57.15 [2.250]	X AND Z	225908-1	9-331256-0	225471-7	5-225518-4	1-225349-1
SUPERSEDED BY 5225349-9	RG-9/U,9A/U & 214/U	220015-1	29.97 [1.180]	59.51 [2.343]	W AND Z	–	9-51713-4	225599-1	225518-3	225349-9
SUPERSEDED BY 225559-8	RG-8/U,8A/U & 213/U	220015-1	26.57 [1.046]	59.51 [2.343]	V AND Z	–	51713-2	225599-1	225518-3	225349-8
SUPERSEDED BY 225554-6	RG-142/U,142A/U & 142B/U	220045-2	30.94 [1.218]	46.81 [1.843]	U AND Y	–	225382-2	225471-3	225518-1	225349-6
OBSOLETE	RG-141/U & 141A/U	220045-2	30.94 [1.218]	46.81 [1.843]	U AND Y	–	225381-2	225471-3	225518-1	225349-5
SUPERSEDED BY 225554-3	RG-59B/U & 62B/U	220045-3	30.94 [1.218]	42.85 [1.687]	U AND Y	–	50428-1	225471-2	225518-2	225349-3
SUPERSEDED BY 225554-2	RG-58/U,58A/U,58B/U & 58C/U	220045-2	30.94 [1.218]	46.81 [1.843]	U AND Y	–	50427-1	225471-1	225518-1	225349-2
SUPERSEDED BY 225554-1	RG-55/U,55A/U,55B/U & 223/U	220045-2	30.94 [1.218]	46.81 [1.843]	U AND Y	–	225382-2	225471-1	225518-1	225349-1

THIS DRAWING IS A CONTROLLED DOCUMENT.

DIMENSIONS: mm [INCHES]

TOLERANCES UNLESS OTHERWISE SPECIFIED:
0 PLC ± –
1 PLC ± –
2 PLC ± 0.41 [.016]
3 PLC ± –
4 PLC ± –
ANGLES ± –

MATERIAL –
FINISH –

DWN B.SCOTT 07-22-91
CHK J. LIPPERT 8-20-91
APVD M. PHILLIPS 9-13-91
PRODUCT SPEC 108-12001
APPLICATION SPEC 408-2299-5
WEIGHT 0.000000

TE Connectivity

NAME
–
PLUG, RIGHT ANGLE, SERIES TNC
–

SIZE A1 | CAGE CODE 00779 | DRAWING NO C-225349 | RESTRICTED TO –

CUSTOMER DRAWING | SCALE 2:1 | SHEET 1 OF 1 | REV M4

4805 (1/15)

Downloaded From Oneyac.com

单击下面可查看定价，库存，交付和生命周期等信息

>>TE Connectivity(泰科)

Downloaded From Oneyac.com