THIS DRAWING IS UNPUBLISHED. RELEASED FOR PUBLICATION -,- .
© COPYRIGHT - By - ALL RIGHTS RESERVED.

LOC	DIST
G	14

REVISIONS

P	LTR	DESCRIPTION	DATE	DWN	APVD
	A	REVISED PER ECO-13-002071	05FEB13	KH	DR

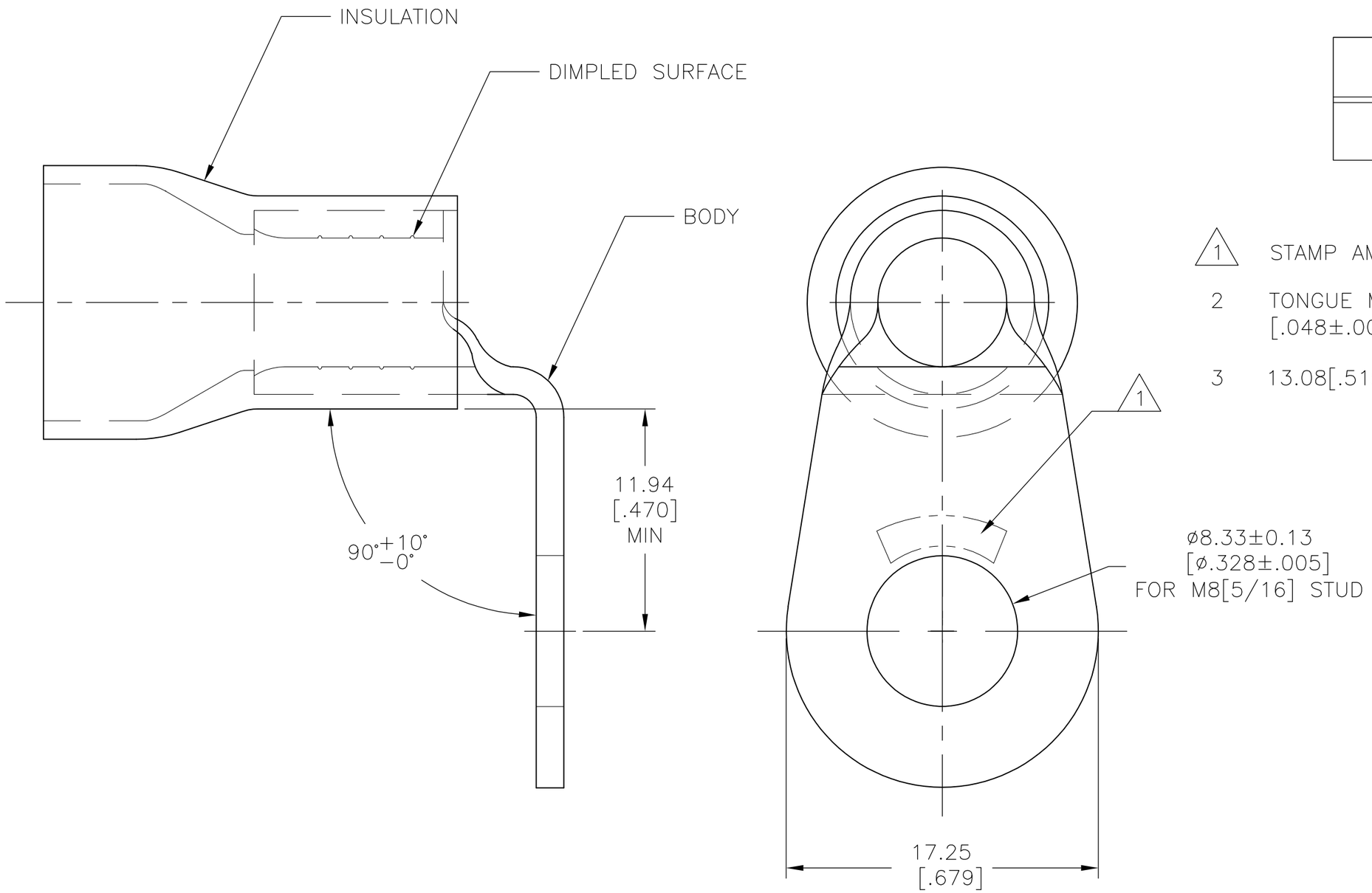

AMP
WIRE RANGE

4 AWG
STRANDED

1. STAMP AMP 4* LOCATE APPROX AS SHOWN
2. TONGUE MATERIAL THK 1.22±0.08 [.048±.003]
3. 13.08[.515] WIRE INSULATION DIA MAX.

QTY	PACKAGE TYPE	PART NO
100	LOOSE PIECE	1958413-1

AMP INCORPORATED
CUSTOMER SERVICE SYSTEMS

FOR ADDITIONAL PRODUCT INFORMATION OR COPIES OF DRAWINGS AND TECHNICAL DOCUMENTS	PRODUCT INFORMATION CENTER 1-800-522-6752
FOR APPLICATION TOOLING INFORMATION	TOOLING ASSISTANCE CENTER 1-800-722-1111
FOR ORDER ENTRY	1-800-526-5142

THIS DRAWING IS A CONTROLLED DOCUMENT FOR AMP INCORPORATED. IT IS SUBJECT TO CHANGE AND THE CONTROLLING ENGINEERING ORGANIZATION SHOULD BE CONTACTED FOR THE LATEST REVISION.

MAX RECOMMENDED OPERATING TEMPERATURE: 105° C[221° F]

VOLTAGE RATING: 600 V MAX

CIRCULAR MIL AREA: 16.77-26.65mm² [33,100-52,600] STRANDED

THIS DRAWING IS A CONTROLLED DOCUMENT.

DIMENSIONS: mm [INCHES]

TOLERANCES UNLESS OTHERWISE SPECIFIED:

0 PLC	± -
1 PLC	± -
2 PLC	± 0.20[.008]
3 PLC	± -
4 PLC	± -
ANGLES	± -

MATERIAL: COPPER PER ASTM B-152 PVC, COLOR: YELLOW

FINISH: TIN PLATE PER ASTM-B545

DWN	KIRAN HOLAL	16APR12
CHK	ROHDE DANIEL	16APR12
APVD	ROHDE DANIEL	16APR12
PRODUCT SPEC	NOT AVAILABLE	
APPLICATION SPEC	114-2161	
WEIGHT	-	

TE Connectivity

NAME: TERMINAL, RING TONGUE, PLASTI-GRIP™ WIRE SIZE, 4 AWG, 5/16 STUD 90 DEG BEND

SIZE	CAGE CODE	DRAWING NO	RESTRICTED TO
A3	00779	C-1958413	-

CUSTOMER DRAWING | SCALE 4:1 | SHEET 1 OF 1 | REV A

1470-19 (3/11)

Downloaded From Oneyac.com

单击下面可查看定价，库存，交付和生命周期等信息

>>TE Connectivity(泰科)

Downloaded From Oneyac.com