THIS DRAWING IS UNPUBLISHED. RELEASED FOR PUBLICATION -,- .
© COPYRIGHT - By - ALL RIGHTS RESERVED.

LOC	DIST
GP	00

REVISIONS

P	LTR	DESCRIPTION	DATE	DWN	APVD
	A	RELEASED PER ECO-11-007655	13APR2011	CJV	SLB

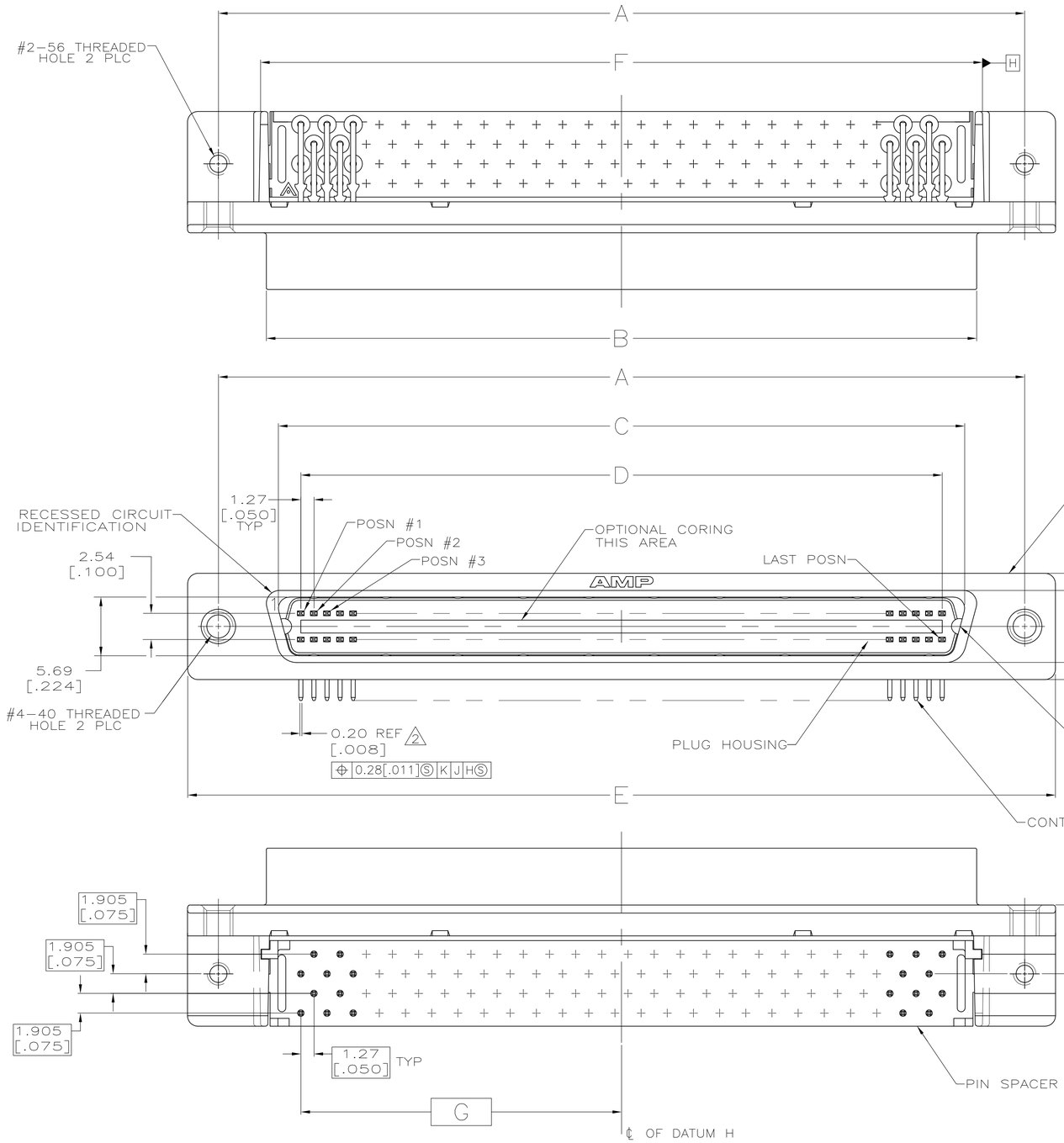

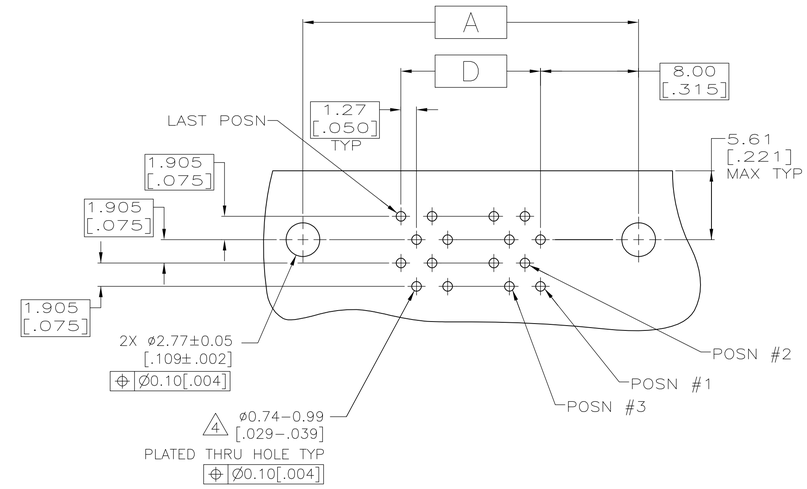

P.C.BOARD MOUNTING DIMENSIONS
CONNECTOR SIDE

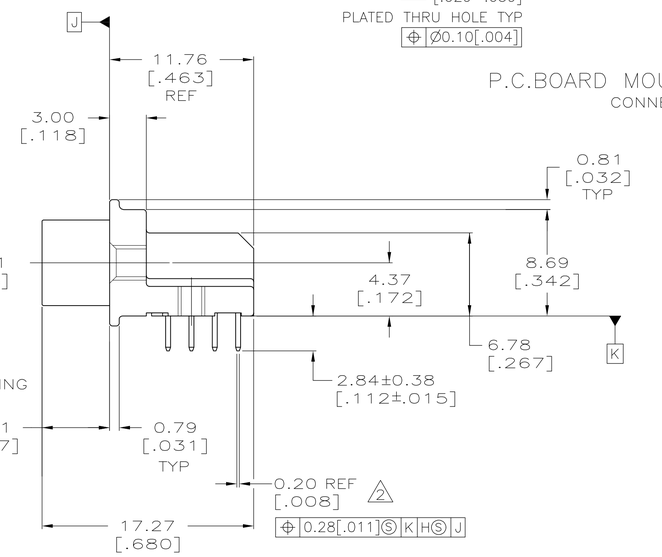

1. FINISH
CONTACTS: 0.76μm [.000030] MIN GOLD PLATE FOR A LENGTH OF 3.35 [.132] MIN FROM MATING END, 3.81μm [.000150] MIN TIN-LEAD FOR A LENGTH OF 3.23 [.127] MIN FROM OPPOSITE END, ALL OVER 1.27μm [.000050] MIN NICKEL UNDERPLATE.
BRACKETS: NICKEL PLATE.

2. POSITION TOLERANCE APPLIES AT TIP ONLY.

3. MATERIAL
CONTACTS: PHOSPHOR BRONZE
HOUSING & PIN SPACER: UL V-O RATED POLYESTER LCP COLOR BLACK
BRACKET: ZINC.

4. ACTUAL HOLE SIZE USED WILL DEPEND ON TRACE ROUTING REQUIREMENTS BETWEEN HOLES AND CONNECTOR PLACEMENT TECHNIQUE.

G	F	E	D	C	B	A	NO. OF POSN	PART NO.
31.11 [1.225]	70.36 [2.770]	84.20 [3.315]	62.23 [2.450]	66.60 [2.622]	68.94 [2.714]	78.23 [3.080]	100	2180279-9

THIS DRAWING IS A CONTROLLED DOCUMENT.

DIMENSIONS: mm [INCHES]

TOLERANCES UNLESS OTHERWISE SPECIFIED:
0 PLC ± -
1 PLC ± -
2 PLC ± 0.13 [.005]
3 PLC ± -
4 PLC ± -
ANGLES ± 0° 30'

MATERIAL 3
FINISH 1

DWN	C. VALENTINE	13APR2001
CHK	S. BOLASH	13APR2011
APVD	S. BOLASH	13APR2011
PRODUCT SPEC	108-1228	
APPLICATION SPEC	114-40029	
WEIGHT	—	

TE Connectivity

NAME: PLUG ASSEMBLY, SHIELDED, RIGHT ANGLE, AMPLIMITE® .050 Series

SIZE	CAGE CODE	DRAWING NO	RESTRICTED TO
A1	00779	C-2180279	—

CUSTOMER DRAWING | SCALE 4:1 | SHEET 1 OF 1 | REV A

4805 (3/11)

Downloaded From Oneyac.com

单击下面可查看定价，库存，交付和生命周期等信息

>>TE Connectivity(泰科)

Downloaded From Oneyac.com