THIS DRAWING IS UNPUBLISHED. RELEASED FOR PUBLICATION
© COPYRIGHT – BY TYCO ELECTRONICS CORPORATION. ALL RIGHTS RESERVED.

LOC	DIST
ES	00

REVISIONS

P	LTR	DESCRIPTION	DATE	DWN	APVD
	B	REVISED FB00-0012-045	24JAN05	C.W	I.E

NOTES:

1. MATERIAL: H.S.G: GLASS-FILLED P.B.T COLOR: BLACK
   CONTACT: COPPER ALLOY
2. FINISH: CONTACT: MATTE TIN PLATE NICKEL UNDER-PLATE ALL OVER.
3. FINISH: CONTACT: GOLD PLATE 0.15-0.3um AT CONTACT AREA ZONE I
   MATTE TIN PLATE 0.1-0.3um AT CONTACT AREA ZONE II
   NICKEL UNDER-PLATE ALL OVER.
4. MATING CONN. (WIRE SIDE AWG#26-#28)
   6POS. TYPE173977-3 OR 175778-3
   8POS. TYPE173977-4 OR 175778-4
5. SPEC.: CURRENT RATING 2A MAX./PIN
6. RECOMMENDED MATING P.C.B DIMENSIONS

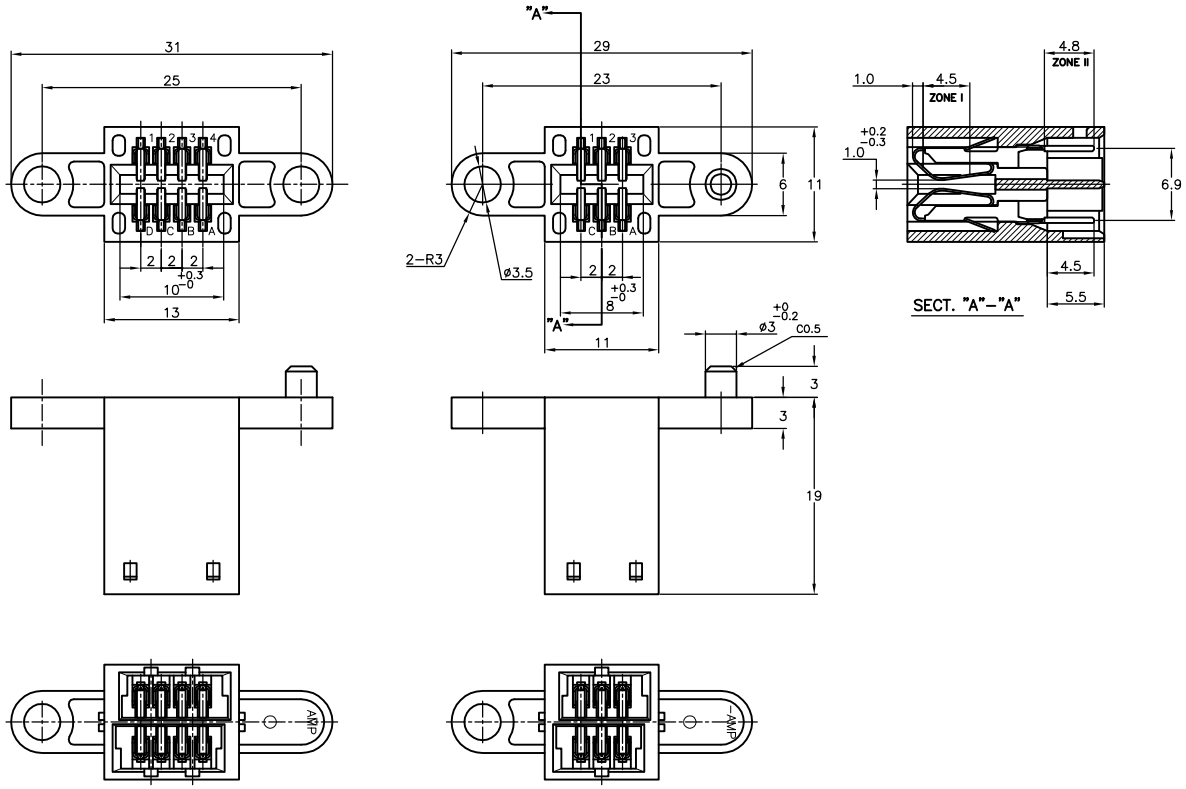

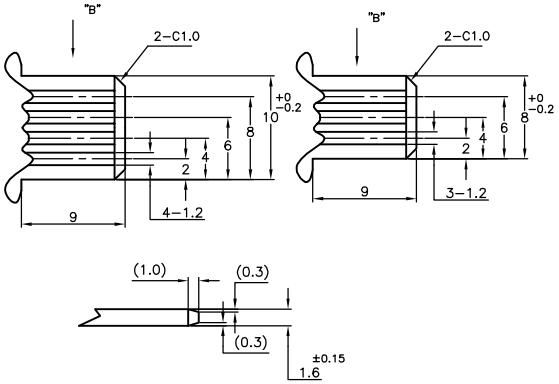

VIEW "B"

3	8	292204-3
2	8	292204-2
2	6	292204-1
FINISH	POS.	PART NUMBER

THIS DRAWING IS A CONTROLLED DOCUMENT.

TOLERANCES UNLESS OTHERWISE SPECIFIED
10≥* : ±0.2
30≥*>10 : ±0.25
100≥*>30 : ±0.3
ANGLE : ±3°

DIMENSIONS: MM

TOLERANCES UNLESS OTHERWISE SPECIFIED:
0 PLC ± 0.15
1 PLC ± 0.15
2 PLC ± 0.15
3 PLC ± 0.15
4 PLC ± 0.15
ANGLES ± 1°

MATERIAL: SEE NOTES
FINISH: SEE NOTES

DWN J.JIANG 05FEB03
CHK S.YAO 05FEB03
APVD T.SASAKI 05FEB03
PRODUCT SPEC 108-60024
APPLICATION SPEC
WEIGHT
CUSTOMER DRAWING

tyco Electronics
Tyco Electronics Corporation
Shanghai, P.R.China,200233

NAME: ASSSEMBLY (6P & 8P) FOR CT CARD EDGE CONNECTOR

SIZE	CAGE CODE	DRAWING NO	RESTRICTED TO
A3	00779	C-292204	—

SCALE 2:1 SHEET 1 OF 1 REV B

AMP 1470-19 REV 31MAR2000

Downloaded From Oneyac.com

单击下面可查看定价，库存，交付和生命周期等信息

>>TE Connectivity(泰科)

Downloaded From Oneyac.com