THIS DRAWING IS UNPUBLISHED. RELEASED FOR PUBLICATION .19 .
© COPYRIGHT 19 BY AMP INCORPORATED. ALL RIGHTS RESERVED.

LOC	DIST
GP	0

REVISIONS

P	LTR	DESCRIPTION	DATE	DWN	APVD
	A	REV; EC 0UIC-0007-01	22JAN01	JA	TW
	B	REVISED PER EC 0S15-0450-02	21JAN2003	DLD	RPM
	C	REVISED PER 0S15-0324-03	09DEC03	JB	CF

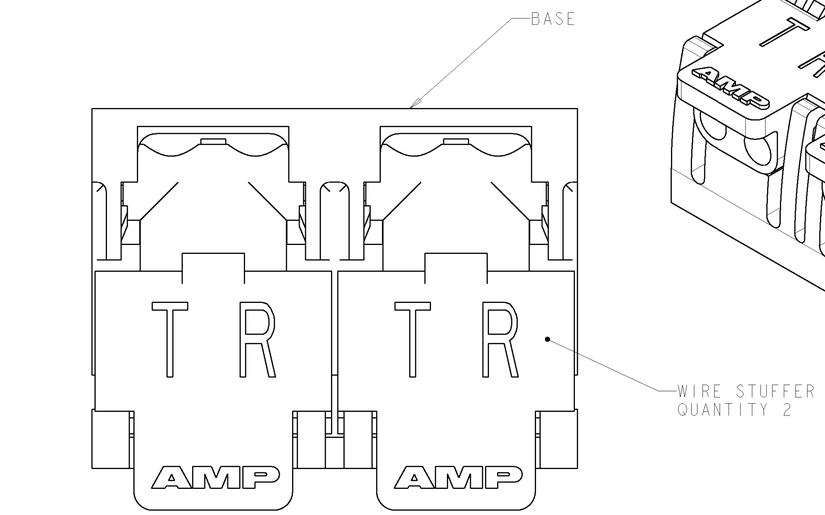

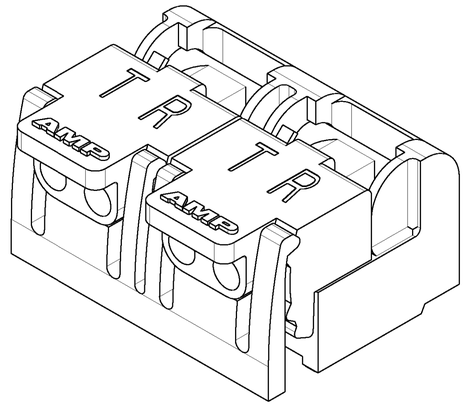

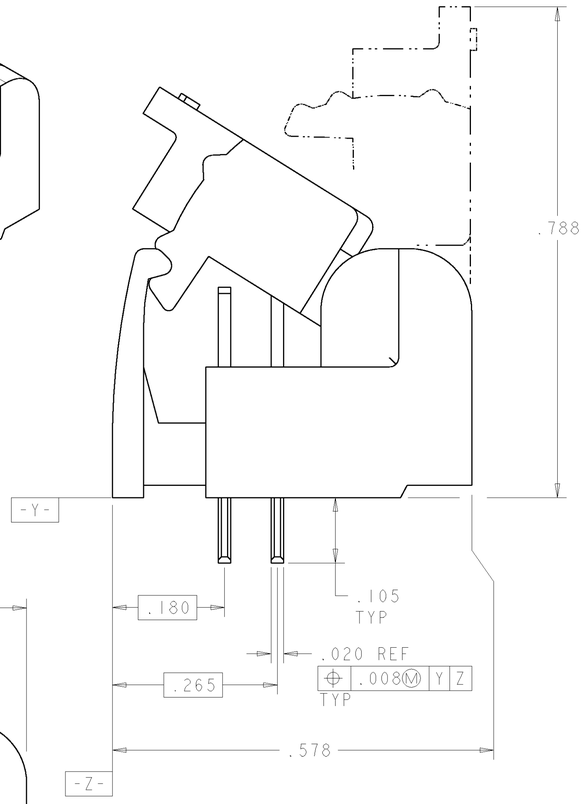

1. MATERIAL: BASE - HIGH TEMPERATURE MOLDING COMPOUND, BLACK. WIRE STUFFER: - HIGH TEMPERATURE MOLDING COMPOUND. TERMINAL - COPPER ALLOY, PLATED WITH 3.81µm MINIMUM THICK. TIN OVER 1.27µm MINIMUM THICK NICKEL UNDERPLATE.

2. EACH WIRE ENTRY HOLE ACCEPTS ONE UNSTRIPPED SOLID COPPER 22-26 AWG WIRE WITH WIRE INSULATION DIAMETER RANGE FROM .040 THROUGH .030. OTHER WIRE SIZES AND TYPES SHALL BE SUBMITTED TO AMP ENGINEERS FOR APPLICATION APPROVAL.

3. SOLDER TABS PROVIDED FOR PERMANENT BOARD MOUNTING.

4. LOCATION OF HOLE PATTERN DETERMINED BASED ON CUSTOMER REQUIREMENTS.

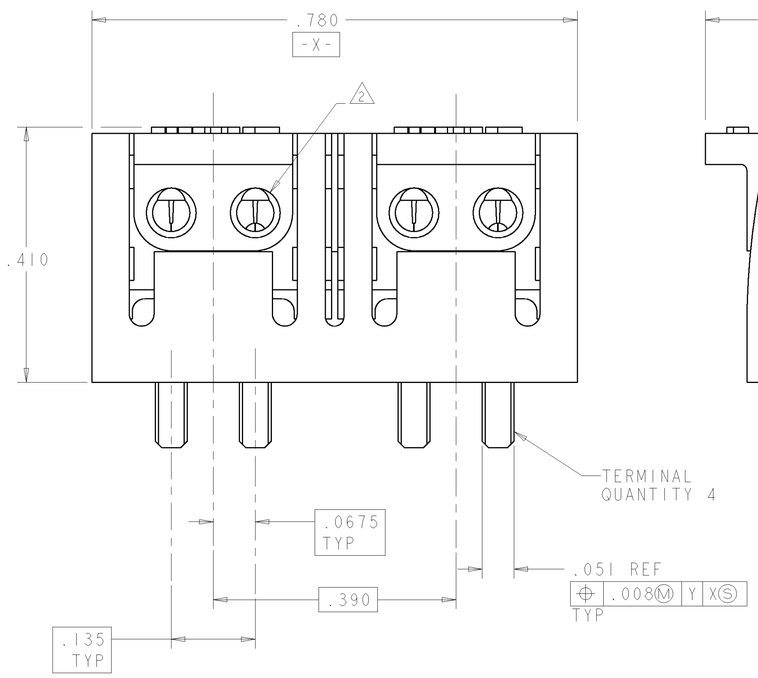

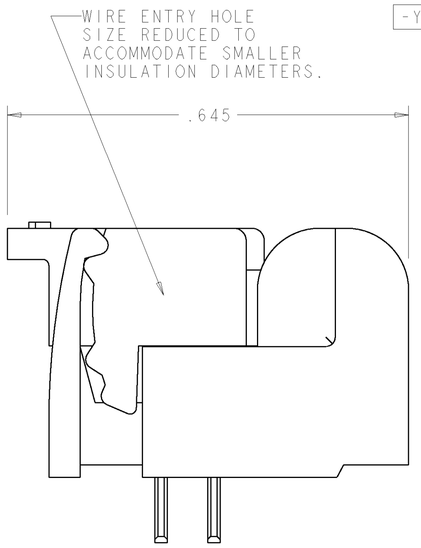

CLOSED POSITION

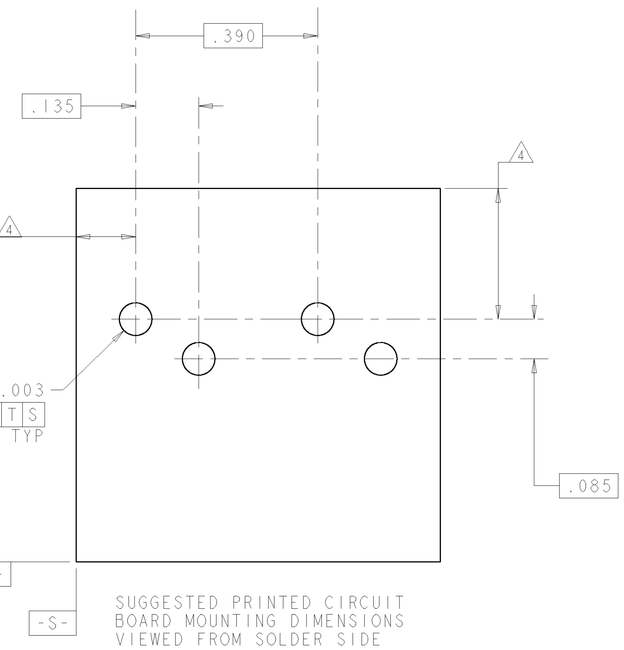

SUGGESTED PRINTED CIRCUIT BOARD MOUNTING DIMENSIONS VIEWED FROM SOLDER SIDE

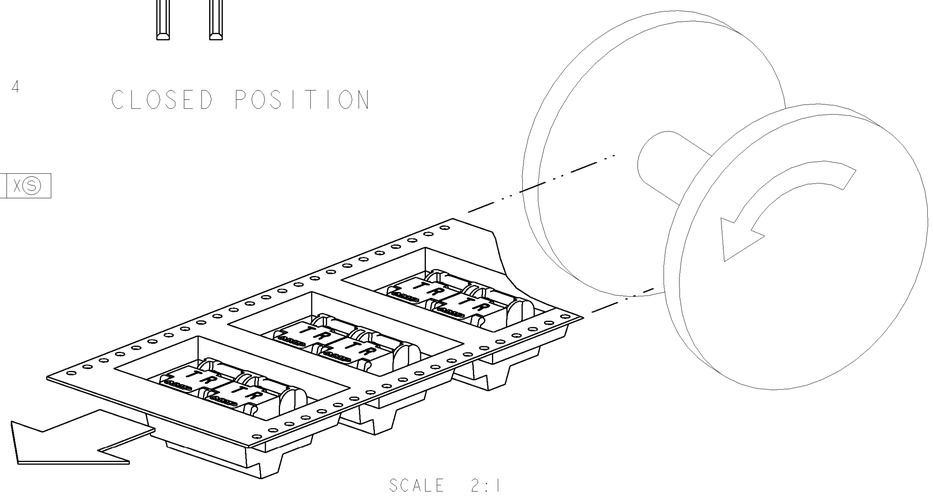

SCALE 2:1

PACKAGING	COLOR CODE			PART NUMBER
TAPE & REEL	GREEN	GREEN	TAN	1-1339395-1
TRAY	RED	GREEN	TAN	1339395-1
	R	T	WIRE STUFFER	

THIS DRAWING IS A CONTROLLED DOCUMENT FOR AMP INCORPORATED. UNLESS OTHERWISE SPECIFIED, THIS DOCUMENT CONTAINS INFORMATION THAT IS PROPRIETARY TO AMP INCORPORATED. ORGANIZATION SHOULD BE CONTACTED FOR THE LATEST REVISION.

DIMENSIONS: INCHES

TOLERANCES UNLESS OTHERWISE SPECIFIED:
0 PLC ±-
1 PLC ±-
2 PLC ±.01
3 PLC ±.005
4 PLC ±-
ANGLES ±2°

MATERIAL 1
FINISH -

DWN J. AHERON 03NOV00
CHK
APVD T. WOJTACKI 03NOV00
PRODUCT SPEC -
APPLICATION SPEC -
WEIGHT -

AMP Incorporated
Harrisburg, PA 17105-3608

NAME ASSEMBLY, DOUBLE PAIR, SINGLE ENTRY, PIVOT II CONNECTOR

SIZE	CAGE CODE	DRAWING NO
A1	00779	C-1339395

CUSTOMER DRAWING | SCALE 6:1 | SHEET 1 OF 1 | REV C

Downloaded From Oneyac.com

单击下面可查看定价，库存，交付和生命周期等信息

>>TE Connectivity(泰科)

Downloaded From Oneyac.com