THIS DRAWING IS UNPUBLISHED. RELEASED FOR PUBLICATION -,- .
© COPYRIGHT - BY TYCO ELECTRONICS CORPORATION. ALL RIGHTS RESERVED.

LOC	DIST
GP	00

REVISIONS

P	LTR	DESCRIPTION	DATE	DWN	APVD
	C	REVISED PER ECO-10-021203	23NOV10	HMR	SB

EJECTION LATCHES OMITTED IN THIS VIEW FOR CLARITY

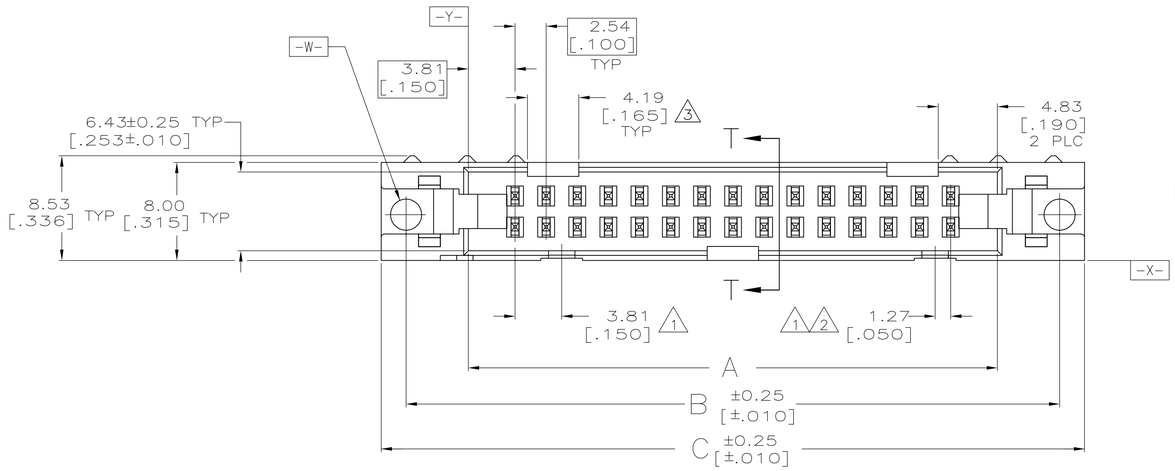

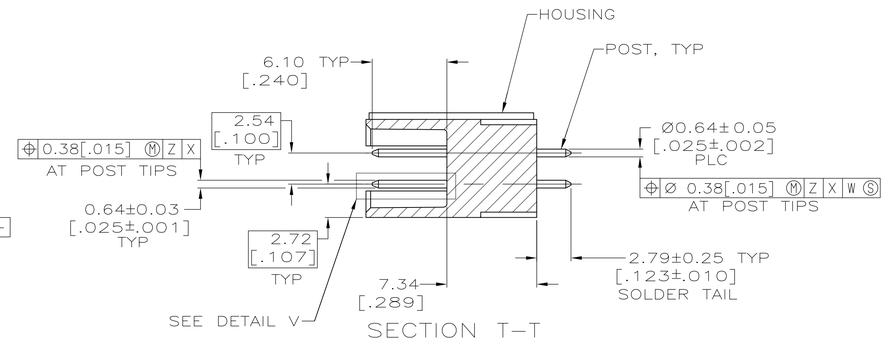

SECTION T-T

1. COORDINATE DIMENSION APPLIES FROM BASIC LOCATION.
2. 10 AND 14 POSITION SIZES CONTAIN ONLY ONE SLOT FOR SNAP-IN POLARIZER (MILITARY POLARIZATION) LOCATED AS SHOWN.
3. 10 POSITION SIZES CONTAIN ONLY ONE SLOT FOR DUAL POLARIZATION, LOCATED AS SHOWN.
4. RECOMMENDED PRINTED CIRCUIT BOARD THICKNESS IS 1.57 [.062].
5. DISTANCE REQUIRED BY EJECTION LATCHES IN THE OPEN POSITION.
6. HOUSING & LATCHES: GLASS FILLED NYLON OR POLYESTER UL94V-0 RATED, BLACK.
7. POSTS: PHOS BRONZE OR BRASS.
8. POSTS: GOLD FLASH OVER PALLADIUM-NICKEL PLATE, 0.38µm[.000015] MIN TOTAL ON THE LOCALIZED PLATE AREA, 2.54µm[.000100] MIN TIN PLATE ON THE SOLDER-TAILS, 1.27µm[.000050] MIN NICKEL UNDERPLATE ON THE ENTIRE POST.
   -OR-
   0.38µm[.000015] MIN GOLD PLATE ON THE LOCALIZED PLATE AREA, 2.54µm[.000100] MIN TIN PLATE ON THE SOLDER-TAILS, 1.27µm[.000050] MIN NICKEL UNDERPLATE ON THE ENTIRE POST.
9. DATUMS -M- & -N- TO BE ESTABLISHED BY CUSTOMER.

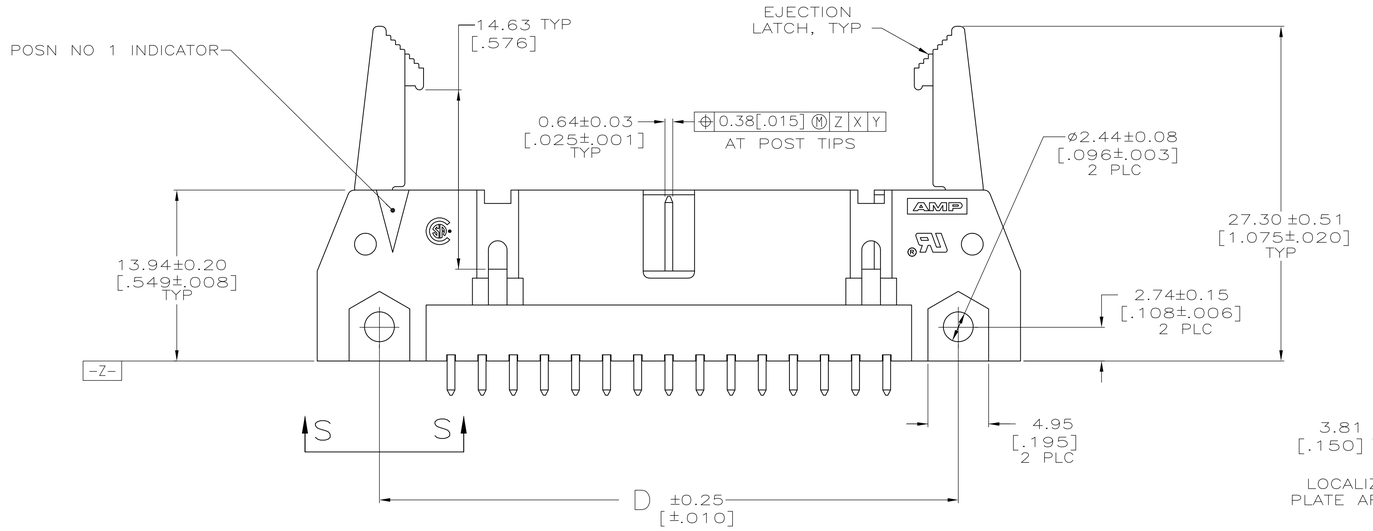

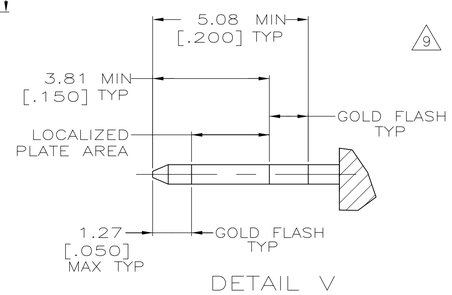

DETAIL V
SCALE 10:1

	60.96 [2.400]	78.74 [3.100]	72.64 [2.860]	82.80 [3.260]	78.74 [3.100]	68.58 [2.700]	50	1-6364106-0
	60.96 [2.400]	78.74 [3.100]	72.64 [2.860]	82.80 [3.260]	78.74 [3.100]	68.58 [2.700]	50	1-6364106-0
	35.56 [1.400]	53.34 [2.100]	47.24 [1.860]	57.40 [2.260]	53.34 [2.100]	43.18 [1.700]	30	6364106-7
	30.48 [1.200]	48.26 [1.900]	42.16 [1.660]	52.32 [2.060]	48.26 [1.900]	38.10 [1.500]	26	6364106-6
	22.86 [.900]	40.64 [1.600]	34.54 [1.360]	44.70 [1.760]	40.64 [1.600]	30.48 [1.200]	20	6364106-4
	15.24 [.600]	33.02 [1.300]	26.92 [1.060]	37.08 [1.460]	33.02 [1.300]	22.86 [.900]	14	6364106-2
OBSOLETE	10.16 [.400]	27.94 [1.100]	21.84 [.860]	32.00 [1.260]	27.94 [1.100]	17.78 [.700]	10	6364106-1
	F	E	D	C	B	A	NO OF POSN	PART NUMBER

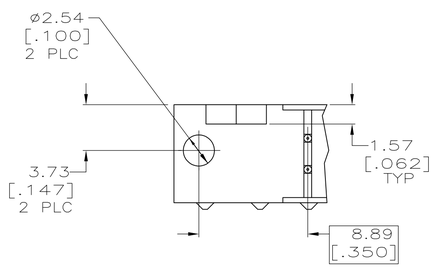

VIEW S-S

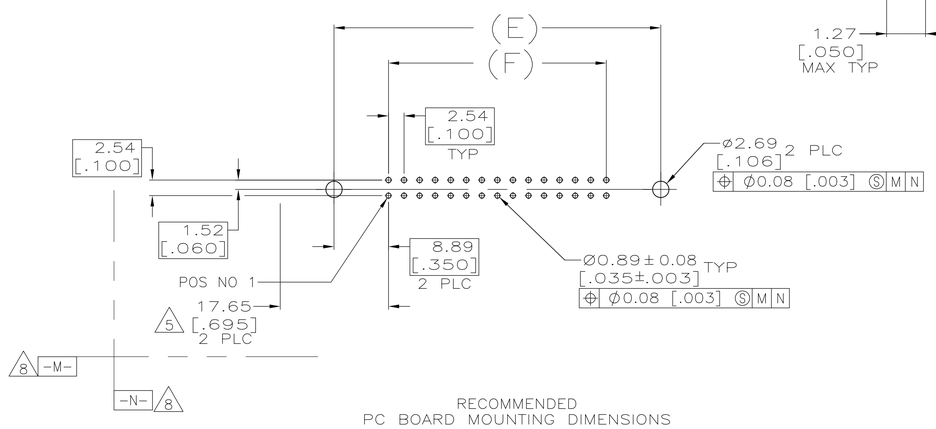

RECOMMENDED PC BOARD MOUNTING DIMENSIONS
SCALE 2:1

THIS DRAWING IS A CONTROLLED DOCUMENT.

DIMENSIONS: mm [INCHES]

TOLERANCES UNLESS OTHERWISE SPECIFIED:
0 PLC ± -
1 PLC ± -
2 PLC ± 0.13[.005]
3 PLC ± -
4 PLC ± -
ANGLES ± -

MATERIAL 6
FINISH 7

DWN A. FERNANDEZ-DOCK5 01-07-05
CHK S. BOLASH 01-07-05
APVD M. WALMSLEY 01-07-05
PRODUCT SPEC 108-40018
APPLICATION SPEC -
WEIGHT -

Tyco Electronics — Tyco Electronics Corporation, Harrisburg, Pa 17105-3608

NAME: HEADER ASSY, UNIVERSAL, AMP-LATCH

SIZE	CAGE CODE	DRAWING NO	RESTRICTED TO
A1	00779	C-6364106	-

CUSTOMER DRAWING — SCALE 4:1 — SHEET 1 OF 1 — REV C

AMP 4805 REV 31MAR2000

Downloaded From Oneyac.com

单击下面可查看定价，库存，交付和生命周期等信息

>>TE Connectivity(泰科)

Downloaded From Oneyac.com