THIS DRAWING IS UNPUBLISHED. RELEASED FOR PUBLICATION 20
© COPYRIGHT 20 BY - ALL RIGHTS RESERVED.

REVISIONS

P	LTR	DESCRIPTION	DATE	DWN	APVD
	A	INITIAL RELEASE	11MAY2015	DL	CW
	A1	ECR-15-013439	11SEP2015	DL	CW
	B	ECR-20-010477	28DEC2020	BS	CW

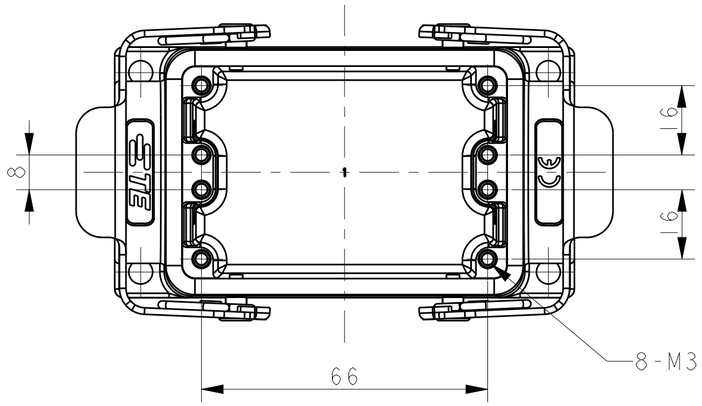

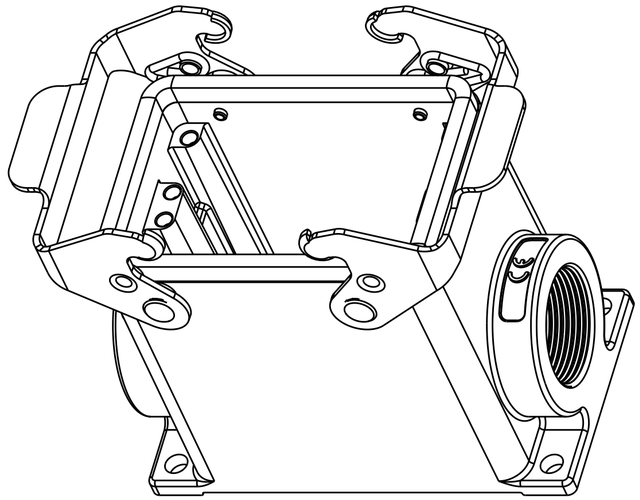

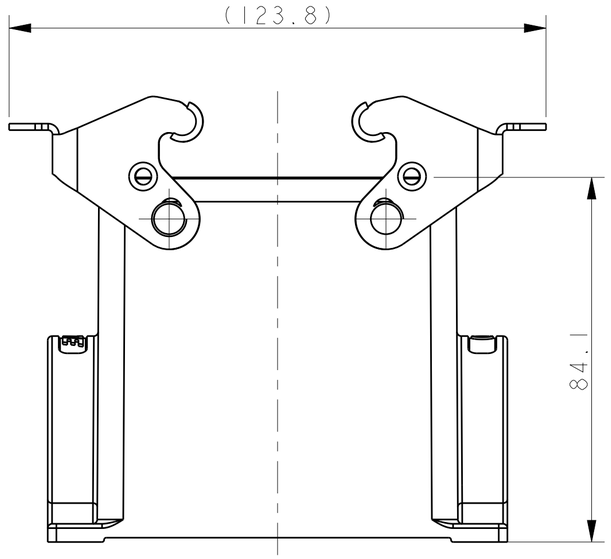

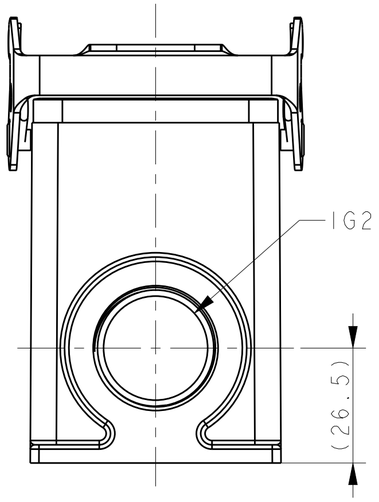

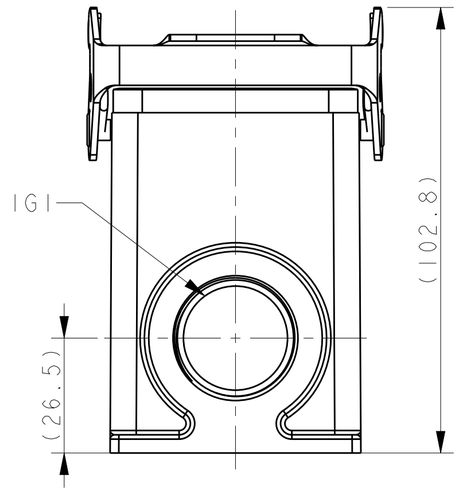

NOTES:
1. TECHNICAL CHARACTERISTICS:
   BODY MATERIAL: DIE CAST ALUMINIUM ALLOY
   SURFACE TREATMENT: POWDER-COATED, GRAY
   DEGREE OF PROTECTION: IP65 (MATED)

注释：
1. 技术参数：
   主体材料： 铝合金
   表面处理： 粉末喷涂， 灰色
   防护等级： IP65(配合)

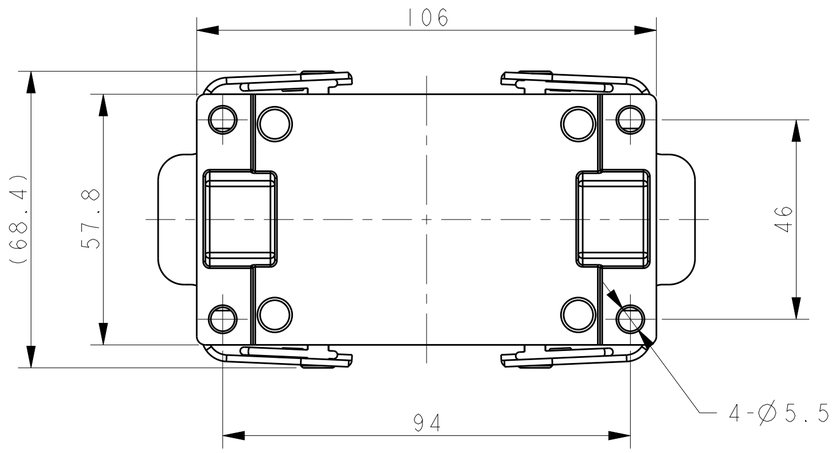

ASSEMBLY PART NUMBER	ASSEMBLY PART DESCRIPTION	1G1	1G2
T1449320121-000	H32A-SGR-PG21	PG21	-
T1449320125-000	H32A-SGR-M25	M25	-
T1449320129-000	H32A-SGR-PG29	PG29	-
T1449320132-000	H32A-SGR-M32	M32	-
T1449320221-000	H32A-SGR-2PG21	PG21	PG21
T1449320225-000	H32A-SGR-2M25	M25	M25
T1449320229-000	H32A-SGR-2PG29	PG29	PG29
T1449320232-000	H32A-SGR-2M32	M32	M32

THIS DRAWING IS A CONTROLLED DOCUMENT.

DIMENSIONS: mm

TOLERANCES UNLESS OTHERWISE SPECIFIED:
0 PLC ±-
1 PLC ±-
2 PLC ±-
3 PLC ±-
4 PLC ±-
ANGLES ±-

MATERIAL - -
FINISH - -

DWN DAVID LI 11MAY2015
CHK CHRIS WANG 11MAY2015
APVD XU XIANG 11MAY2015
PRODUCT SPEC 108-137010
APPLICATION SPEC 114-137010
WEIGHT -

TE Connectivity

NAME H32A-SGR-PG/M

SIZE A2 | CAGE CODE - | DRAWING NO C-T1449320XXX000 | RESTRICTED TO

CUSTOMER DRAWING | SCALE 1:1 | SHEET 1 OF 1 | REV B

1471-9 (3/13)

Downloaded From Oneyac.com

单击下面可查看定价，库存，交付和生命周期等信息

>>TE Connectivity(泰科)

Downloaded From Oneyac.com