© 2021 TE Connectivity. All Rights Reserved.

| REVISIONS | | | | | |
|---|---|---|---|---|---|
| F | LTR | DESCRIPTION | DATE | DWN | APVD |
| | B10 | ADDED NEW PN 1862029-5 DETAILS IN BOM | 26FEB2021 | JJH | JCB |
| | B11 | REFER PCN: E-21-005125 | 19MAY2021 | JJH | JCB |
| | B12 | CORRECTION INSUL-HEIGHT FOR PN 1862029-5 | 27MAY2021 | JJH | JCB |
| | B13 | REVISION MISMACTH RESOLVED | 08SEP2021 | KMD | JCB |

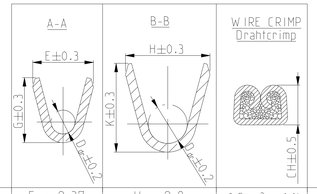


| | | | | | | | | | | | | | | | | | | | |
|---|---|---|---|---|---|---|---|---|---|---|---|---|---|---|---|---|---|---|---|
| - | - | - | - | - | - | 1862029-5 | A | CuFe2 | PRESILVERED vorversilbert 2 | VERSION A | 0.35 - 0.5 FLR | E = 2.37 | H = 2.8 | 0.5mm² = 1.14 | MQC- Applicator | - | 2.5 | 3.8 | 6.6 | 19.5 | 8 0.3 |
| - | - | - | - | - | - | | | | | | | G = 2.45 | K = 3.1 | 0.35mm² = 1.09 | 2837770-2 | | | | | | |
| - | - | - | - | - | - | | | | | | 0.35 - 0.5 FLU | | | 0.5mm² = 1.14 | | | | | | | |
| - | - | - | - | - | - | | | | | | | $D_P$ = 0.8 | $D_P$ = 1.4 | 0.35mm² = 1.09 | | | | | | | |
| - | - | - | - | - | - | - | - | - | - | | 0.2 - 0.5 FLK | E = 2.2 | H = 3.7 | 0.20mm² = 1.13 | MQC- Applicator | 539635-1 WITH DIE: mit Matrize 539744-2 | 2.5 | 3.8 | 6.6 | 19.5 | 8 0.3 |
| - | - | - | - | - | - | - | - | - | - | | | G = 2.2 | K = 3.8 | 0.25mm² = 1.15 | 878426-2 | | | | | | |
| - | - | - | - | - | - | - | - | - | - | | | $D_P$ = 0.8 | $D_P$ = 2.0 | 0.35mm² = 1.19 | | | | | | | |
| - | - | 927839-2 | C | - | - | - | - | CuSn4 | PRETINNED vorverzinnt | | | | | 0.50mm² = 1.26 | | | | | | | |
| - | - | 927839-1 | C | - | - | - | - | CuFe2 | | | 0.5 - 1.0 FLK | E = 2.8 | H = 4.5 | 0.5mm² = 1.38 | MQC- Applicator | 539733-2 WITH DIE: mit Matrize 736249-0 | 3 | 4.2 | 5.8 | 19.5 | 0.4 |
| - | - | - | - | 927827-2 | C | - | - | CuSn4 | PRETINNED vorverzinnt | | | G = 3.0 | K = 4.7 | 0.75mm² = 1.47 | 2-541689-2 | | | | | | |
| - | - | - | - | 927827-1 | C | - | - | CuFe2 | | | | $D_P$ = 1.1 | $D_P$ = 2.4 | 1.0mm² = 1.56 | | | | | | | |
| - | - | - | - | 927833-5 | D | - | - | CuFe2 | 2 | | >1.0 - 2.5 FLK | E = 3.8 | H = 5.7 | 1.5mm² = 1.76 | MQC- Applicator | 539635-1 WITH DIE: mit Matrize 539733-2 | 3.5 | 4.7 | 6.3 | 19.5 | 0.4 |
| - | - | - | - | 927833-2 | D | - | - | CuSn4 | PRETINNED vorverzinnt | | | G = 4.1 | K = 5.8 | 2.0mm² = 1.90 | 878367-2 | | | | | | |
| - | - | - | - | 927833-1 | D | - | - | CuFe2 | | | | $D_P$ = 1.6 | $D_P$ = 3.6 | 2.5mm² = 2.04 | | | | | | | |
| 927824-2 | C | - | - | - | - | - | - | CuSn4 | PRETINNED vorverzinnt | | >2.5 - 4.0 FLK | E = 4.6 | H = 6.3 | 3.0mm² = 2.13 | MQC- Applicator | 539635-1 WITH DIE: mit Matrize 539736-2 | 4 | 5.2 | 6.8 | 19.5 | 0.6 |
| 927824-1 | C | - | - | - | - | - | - | CuFe2 | | | | G = 4.8 | K = 6.6 | 3.5mm² = 2.24 | 2-878314-2 | | | | | | |
| 1 963709-5 | C | - | - | - | - | - | - | CuFe2 | vorversilbert PRESILVERED 2 | | | $D_P$ = 2.4 | $D_P$ = 4.0 | 4.0mm² = 2.35 | | | | | | | |
| - | - | - | - | - | - | - | - | - | - | | 4.0 - 6.0 FLK | E = 5.2 | H = 7.3 | 4.0mm² = 2.17 | MQC- Applicator | - | 4.2 | 5.6 | 7.7 | 20 | 0.6 |
| - | - | - | - | - | - | - | - | - | - | | | G = 5.5 | K = 7.6 | 5.0mm² = 2.36 | 2-878738-2 | | | | | | |
| 1 963709-2 | C | - | - | - | - | - | - | CuSn4 | vorverzinnt PRETINNED | | | $D_P$ = 2.9 | $D_P$ = 4.5 | 6.0mm² = 2.55 | | | | | | 20.4 | |
| 1 963709-1 | C | - | | - | - | - | - | CuFe2 | | | | | | | | | | | | | |
| - | - | - | - | - | - | - | - | - | - | | 0.2 - 0.5 FLR | E = 2.2 | H = 2.8 | 0.2mm² = 1.13 | MQC- Applicator | - | 2.5 | 3.8 | 6.6 | 19.5 | 8 0.3 |
| 1241818-5 | B | - | - | - | - | - | - | CuFe2 | 2 | | | G = 2.2 | K = 2.8 | 0.35mm² = 1.19 | 878427-2 | | | | | | |
| 1241818-1 | B | - | - | - | - | - | - | CuFe2 | vorverzinnt PRETINNED | | | $D_P$ = 0.8 | $D_P$ = 1.4 | 0.5mm² = 1.26 | | | | | | | |
| - | - | 927840-5 | C | - | - | - | - | CuFe2 | vorversilbert PRESILVERED 2 | | 0.5 - 1.0 FLR | E = 2.8 | H = 3.9 | 0.5mm² = 1.43 | MQC- Applicator | 169400-0 WITH DIE: mit Matrize 734781-1 | 3 | 4.2 | 5.8 | 19.5 | 0.4 |
| - | - | 927840-4 | C | - | - | - | - | CuSn4 | | | | G = 3.0 | K = 4.1 | 0.75mm² = 1.52 | 878328-2 | | | | | | |
| - | - | - | - | - | - | - | - | - | - | | | $D_P$ = 1.1 | $D_P$ = 1.8 | 1.0mm² = 1.61 | | | | | | | |
| - | - | 927840-2 | C | - | - | - | - | CuSn4 | vorverzinnt PRETINNED | | >1.0 - 2.5 FLR | E = 3.8 | H = 4.8 | 1.25mm² = 1.69 | MQC- Applicator | 169400-0 WITH DIE: mit Matrize 734251-0 | 3.5 | 4.7 | 6.3 | 19.5 | 0.4 |
| - | - | 927840-1 | C | - | - | - | - | CuFe2 | | | | G = 4.1 | K = 4.9 | 1.5mm² = 1.76 | 878356-2 | | | | | | |
| - | - | - | - | 1 927831-5 | C | - | - | CuFe2 | 1 | | | $D_P$ = 1.6 | $D_P$ = 2.6 | 2.0mm² = 1.90 | | | | | | | |
| - | - | - | - | 927831-5 | C | - | - | CuFe2 | vorversilbert PRESILVERED 2 | | | | | 2.5mm² = 2.04 | | | | | | | |
| - | - | - | - | 927831-4 | C | - | - | CuSn4 | | | >2.5 - 4.0 FLR | E = 4.6 | H = 5.5 | 3.0mm² = 2.13 | MQC- Applicator | 169400-0 WITH DIE: mit Matrize 734251-0 | 4 | 5.2 | 6.8 | 19.5 | 0.6 |
| - | - | - | - | - | - | - | - | - | - | | | G = 4.8 | K = 5.7 | 3.5mm² = 2.24 | 2-878384-2 | | | | | | |
| - | - | - | - | 927831-2 | C | - | - | CuSn4 | vorverzinnt PRETINNED | | | $D_P$ = 2.4 | $D_P$ = 3.3 | 4.0mm² = 2.35 | | | | | | | |
| - | - | - | - | 927831-1 | C | - | - | CuFe2 | | | | | | | | | | | | | |
| - | - | - | 1 927837-5 | D | - | - | - | CuFe2 | 1 | | | | | | | | | | | | |
| - | - | - | - | 927837-6 | D | - | - | CuFe2 | 4 | | | | | | | | | | | | |
| - | - | - | - | 927837-5 | D | - | - | CuFe2 | vorversilbert PRESILVERED 2 | | | | | | | | | | | | |
| - | - | - | - | 927837-4 | D | - | - | CuSn4 | | | | | | | | | | | | | |
| - | - | - | - | - | - | - | - | - | - | | | | | | | | | | | | |
| - | - | - | - | 927837-2 | D | - | - | CuSn4 | vorverzinnt PRETINNED | | | | | | | | | | | | |
| - | - | - | - | 927837-1 | D | - | - | CuFe2 | | | | | | | | | | | | | |
| 1 1-927829-5 | D | - | - | - | - | - | - | CuFe2 | 1 | | | | | | | | | | | | |
| 927829-5 | D | - | - | - | - | - | - | CuFe2 | 2 | | | | | | | | | | | | |
| 927829-2 | D | - | - | - | - | - | - | CuSn4 | vorverzinnt PRETINNED | | | | | | | | | | | | |
| 927829-1 | D | - | - | - | - | - | - | CuFe2 | | | | | | | | | | | | | |

| | | | | | | | | | | | | | | | | | | | | | |
|---|---|---|---|---|---|---|---|---|---|---|---|---|---|---|---|---|---|---|---|---|---|
| - | - | - | - | 2-927836-2 | C | - | - | CuSn4 | 5 | VERSION B | 0.5 - 1.0 FLR | E = 2.8 | H = 7.6 | 0.5mm² = 1.43 | MQC- Applicator | 539635-1 WITH DIE: mit Matrize 739736-2 | 3 | 5.4 | 7.2 | 20 | 1.25 | 963243-1 963244-1 | 100132-1 |
| - | - | - | - | - | - | - | - | - | - | | | G = 3.0 | K = 7.7 | 0.75mm² = 1.52 | 878337-2 | | | | | | | | |
| - | - | - | - | 927836-2 | C | - | - | CuSn4 | vorverzinnt PRETINNED | | | $D_P$ = 1.1 | $D_P$ = 5.6 | 1.0mm² = 1.61 | | | | | | | | | |
| - | - | - | - | 927836-1 | C | - | - | CuFe2 | | | >1.0 - 2.5 FLR | E = 3.8 | H = 7.6 | 1.5mm² = 1.76 | MQC- Applicator | 539635-1 WITH DIE: mit Matrize 539736-2 | 3.5 | 5.9 | 7.7 | 20 | 1.25 | 963244-1 963245-1 | 100132-1 |
| - | - | - | - | 2-927835-2 | C | - | - | CuSn4 | 5 | | | G = 4.1 | K = 7.7 | 2.0mm² = 1.90 | 878338-2 | | | | | | | | |
| - | - | - | - | 2-927835-1 | C | - | - | CuSn4 | 6 | | | $D_P$ = 1.6 | $D_P$ = 5.6 | 2.5mm² = 2.04 | | | | | | | | | |
| - | - | - | - | 1-927835-3 | C | - | - | CuFe2 | 6 | | >2.5 - 4.0 FLR | E = 4.6 | H = 7.6 | 3.0mm² = 2.13 | MQC- Applicator | 539635-1 WITH DIE: mit Matrize 539736-2 | 4 | 5.9 | 7.7 | 20 | 1.25 | 963245-1 | 100132-1 |
| - | - | - | - | - | - | - | - | - | - | | | G = 4.8 | K = 7.7 | - | 878441-2 | | | | | | | | |
| - | - | - | - | 927835-2 | C | - | - | CuSn4 | vorverzinnt PRETINNED | | | $D_P$ = 2.4 | $D_P$ = 5.6 | 4.0mm² = 2.35 | | | | | | | | | |
| - | - | - | - | 927835-1 | C | - | - | CuFe2 | | | | | | | | | | | | | | | |
| 2-928966-2 | D | - | - | - | - | - | - | CuSn4 | 5 | | >3.0 - 5.0 FLR | E = 4.8 | H = 8.15 | 3.0mm² = 2.25 | MQC- Applicator | - WITH DIE: mit Matrize | 4 | 5.9 | 7.7 | 20 | 1.25 | 967011-1 963245-1 | 100132-1 |
| 2-928966-1 | D | - | - | - | - | - | - | CuSn4 | 6 | | | G = 5.2 | K = 7.8 | 4.0mm² = 2.50 | - | | | | | | | | |
| 1-928966-3 | D | - | - | - | - | - | - | CuFe2 | 6 | | | $D_P$ = 2.5 | $D_P$ = 6.0 | 5.0mm² = 2.75 | | | | | | | | | |
| - | - | - | - | - | - | - | - | - | - | | DGB WIRE RANGE (mm²) | WIRE CRIMP Drahtcrimp | INSUL-CRIMP Isol - crimp | CRIMP HEIGHT Crimp-Hoehe | APPLICATION TOOL Anschlag-WKZ | HAND TOOL Handzange | A | B | C | D | E | SINGLE WIRE SEAL Einzeldichtung | DEAD END PLUG Blindstopfen |
| 928966-2 | D | - | - | - | - | - | - | CuSn4 | vorverzinnt PRETINNED | | | SRTIP FORM / Bandware | | | | | | | | | | | |
| 928966-1 | D | - | - | - | - | - | - | CuFe2 | | | | CRIMP DIMENSIONS (mm) Crimpabmessungen (mm) | | | EXTRACTION TOOL Ausdrueckwerkzeug Nr.:726503-1 | | | | | | | TE CONNECTIVITY ORDER - No. 7 | |
| 1241962-1 | B | - | - | - | - | - | - | CuFe2 | vorverzinnt PRETINNED | | | | | | | | | | | | | | |

| TE Connectivity ORDER - NO STRIP FORM Bandware (SERRATION DESIGN - 1) | REV | TE Connectivity ORDER - NO STRIP FORM Bandware (SERRATION DESIGN - 2) | REV | TE Connectivity ORDER - NO STRIP FORM Bandware (SERRATION DESIGN - 3) | REV | TE Connectivity ORDER - NO STRIP FORM Bandware (SERRATION DESIGN - 4) | REV | MATERIAL Werkstoff | SURFACE Oberflaeche |
|---|---|---|---|---|---|---|---|---|---|

1 CONTACT ZONE SELECTIVE
PRE SILVER PLATED MIN 3-4.5 µm
Kontaktzone selektiv
vorversilbert min. 3-4.5 µm

2 CONTACT ZONE SELECTIVE
PRE SILVER PLATED MIN 1-1.5 µm
Kontaktzone selektiv
vorversilbert min. 1-1.5 µm

3 CONTACT BODY: ELECTRO TIN PLATED OVER NICKEL
CONTACT AREA: GOLD PLATED
Kontaktkoerper: gal. verzinnt ueber Nickel
Kontaktzone: vergoldet

4 CONTACT BODY: ELECTRO TIN PLATED OVER NICKEL
CONTACT AREA: SELECTIVE NICKEL PLATED 2-4 µm
Kontaktkoerper: gal. verzinnt ueber Nickel
Kontaktzone: selektiv vernickelt 2-4 µm

5 CONTACT BODY: ELECTRO TIN PLATED OVER NICKEL
TOUCHING AREA TO CANTILEVER SPRING:
SELECTIVE AU PLATED OVER NICKEL
CANTILEVER SPRING: COMPLETELY AU PLATED
Kontaktkoerper: gal. verzinnt ueber Nickel
Anlageflaeche zur Ueberfeder
selektiv Au ueber Ni beschichtet
Ueberfeder: komplett Au beschichet

6 CONTACT BODY: ELECTRO TIN PLATED OVER NICKEL
TOUCHING AREA TO CANTILEVER SPRING AND CONTACT AREA
SELECTIVE AU PLATED OVER NICKEL
CANTILEVER SPRING: COMPLETELY AU PLATED
Kontaktkoerper: gal. verzinnt ueber Nickel
Anlageflaeche zur Ueberfeder Kontaktzone
selektiv Au ueber Ni beschichtet
Ueberfeder: komplett Au beschichet

7 PRE-FORM ISO-AREA
ONLY FOR PN: 1241962-1
Isoflanken vorgeformt
nur bei PN:1241962-1

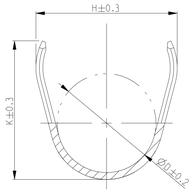


B-B

8 WRAP CRIMP
ONLY FOR PN: 927839.927840.928989 AND 928990
Umfassungscrimp
nur bei PN: 927839.927840.928989 und 928990

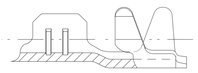

9 TRANSITION ONLY FOR PN 927827.927828.927829.
927830.927833.927834.927837 AND 927838
Uebergang nur fuer PN 927827.927828.927829.
927830.927833.927834.927837 und 927838

10 1-3 µm Sn28M LAYER FOR HIGHER
TEMPERATURE REQUIREMENTS
1-3 µm Sn28M Schicht fuer hoehere
Temperaturanforderungen

11 DOTTED LINE IS ALTERNATIVE SHAPE
Gestrichelte Linie alternative Form

12 OBSOLETE

13 SEE APPLICATION SPEC. FOR PREFERRED STANDARD TO MEET NEW REQUIREMENT
LV214-2 SLOW MOTION BENDING TEST
Siehe Verarbeitungs Spezifikation fuer bevorzugten Standard um den neuen
Anforderungen der LV214-2 Slow Motion Pruefung zu genuegen

# VERSION A
# (UNSEALED / ungedichtet)

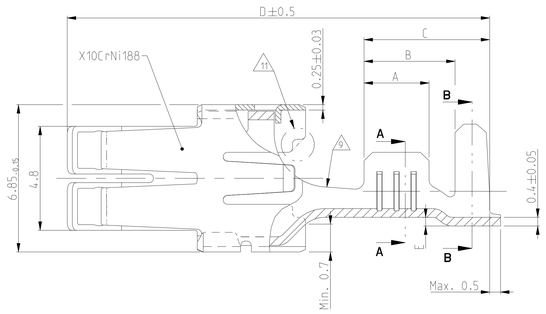


SERRATION DESIGN - 1

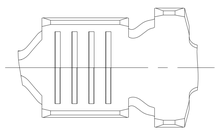

SERRATION DESIGN - 2

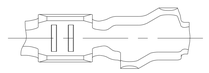

SERRATION DESIGN - 3

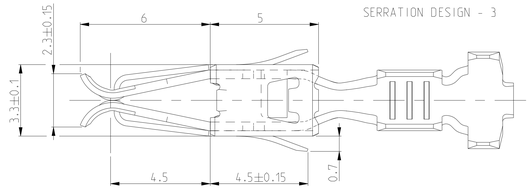


SERRATION DESIGN - 4

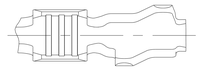

# VERSION B
# (SINGLE WIRE SEAL/
# Einzel-Dichtungs-System)

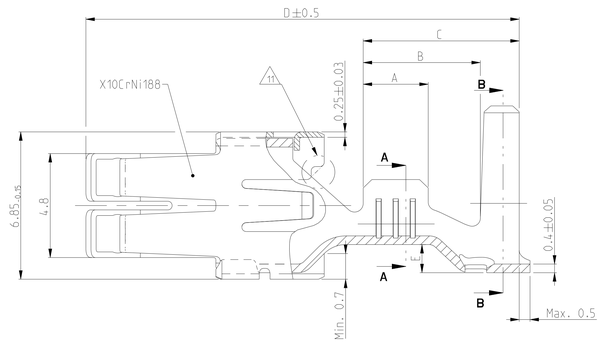


SERRATION DESIGN - 3

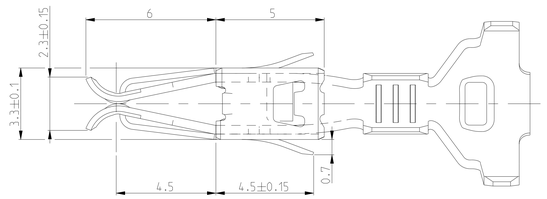


SERRATION DESIGN - 1

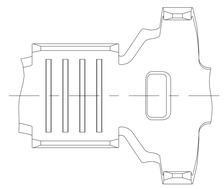

| | | | |
|---|---|---|---|
| THIS DRAWING IS A CONTROLLED DOCUMENT. DIMENSIONING AND TOLERANCING PER DPS (ISO STANDARDS). | DWN 06APR2011 M.PEFJLSCH-FJ16 | TE Connectivity | |
| DIMENSIONS: mm | CHK 17MAY2000 V.HUHN | NAME STANDARD POWER TIMER CONTACT Standard Power Timer Kontakt | |
| TOLERANCES UNLESS OTHERWISE SPECIFIED: ± DIM MAX/MIN ± DIM MAX/MIN 0 PLC ±0.2mm 2 PLC ±0.1 3 PLC ±0.05 4 PLC ±0.025 ANGLES ± 2° | APVD 17MAY2000 M.BLEICHER | PRODUCT SPEC 108-18025 | |
| | | APPLICATION SPEC 114-18037 | |
| EXTRACTION TOOL 1-1579007-6 968107-1 | MATERIAL - - | WEIGHT | SIZE A0 / CAGE CODE 00779 / DRAWING NO C-1355048 / RESTRICTED TO |
| | FINISH - - | CUSTOMER DRAWING | SCALE 10:1 / SHEET 1 OF 1 / REV B13 |

4806 (3/13)
Downloaded From Onevac.com

单击下面可查看定价，库存，交付和生命周期等信息

>>TE Connectivity(泰科)

Downloaded From Oneyac.com