THIS DRAWING IS UNPUBLISHED. RELEASED FOR PUBLICATION –,– .
© COPYRIGHT – BY TYCO ELECTRONICS CORPORATION. ALL RIGHTS RESERVED.

LOC	DIST
AD	00

REVISIONS

P	LTR	DESCRIPTION	DATE	DWN	APVD
	B	REV PER EC 0S12–0302–05	05DEC05	BC	GS
	C	ECR–10–019054	15SEP10	DP	MQW

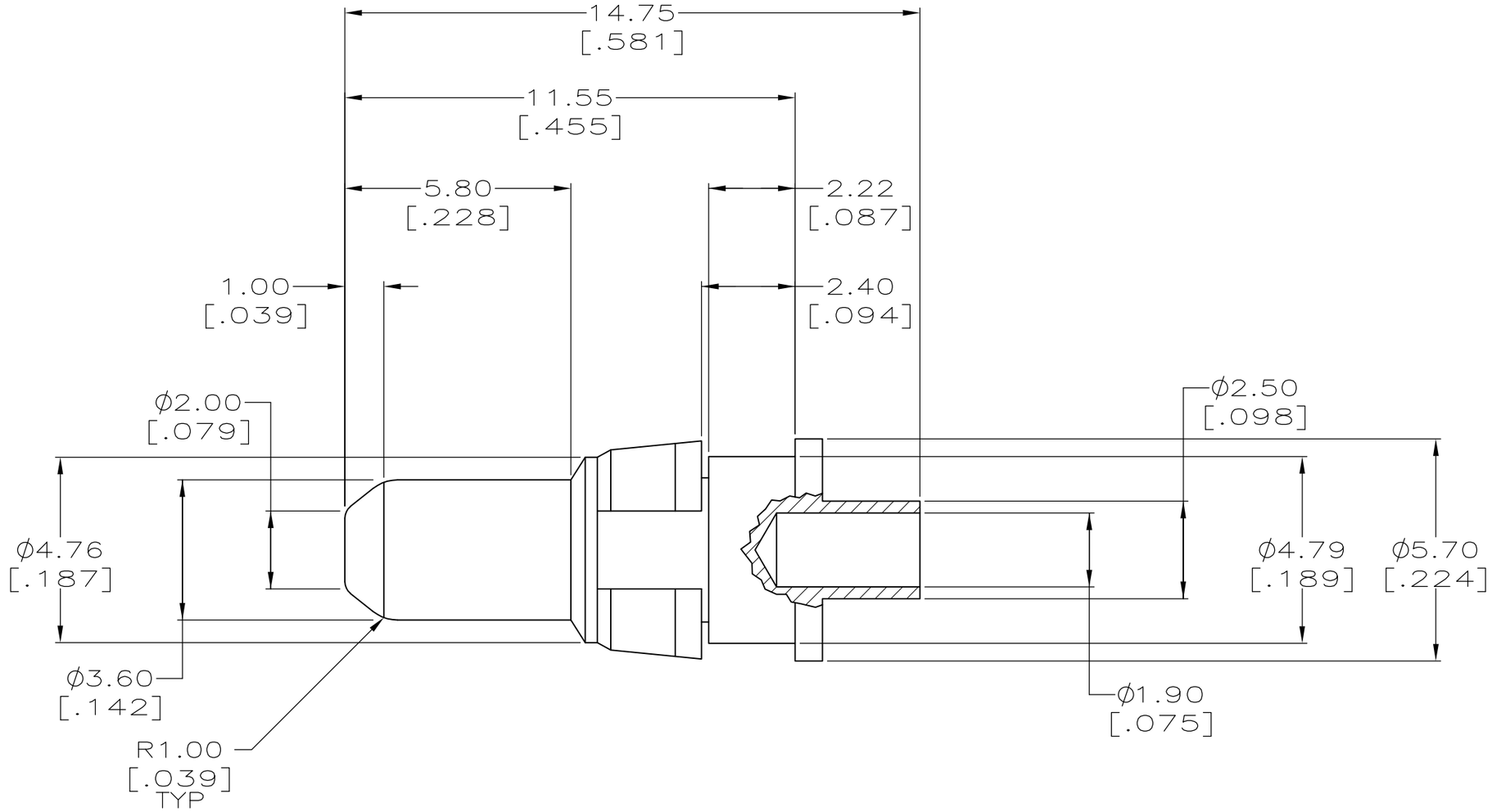

1. CONTACT: BRASS.
   RETAINING RING: BERYLLIUM COPPER.
2. CONTACT: 0.76μm[.000030] MIN GOLD OVER 1.27μm[.000050] MIN NICKEL.

148533–1

PART NUMBER

THIS DRAWING IS A CONTROLLED DOCUMENT.

DIMENSIONS: mm [INCHES]

TOLERANCES UNLESS OTHERWISE SPECIFIED:

~~0 PLC~~	~~± –~~	±0.2
~~1 PLC~~	~~± –~~	
~~2 PLC~~	~~± 0.13 [.005]~~	
~~3 PLC~~	~~± –~~	
~~4 PLC~~	~~± –~~	
~~ANGLES~~	~~± –~~	

MATERIAL 1

FINISH 2

DWN	B.CARBO	03 JUN 99
CHK	C.RICHARD	03 JUN 99
APVD	C.RICHARD	03 JUN 99
PRODUCT SPEC	–	
APPLICATION SPEC	–	
WEIGHT	–	

CUSTOMER DRAWING

Tyco Electronics

Tyco Electronics Corporation
Harrisburg, PA 17105–3608

NAME: POWER CONTACT, MALE, SHORT CUP, (10 AMP)
–

SIZE	CAGE CODE	DRAWING NO	RESTRICTED TO
A3	00779	C–148533	–

SCALE	SHEET	REV
8:1	1 OF 1	C

AMP 1470–19 REV 31MAR2000

05DEC2005 2:04pm US040973 H:\dmmod\148533–c.dwg

Downloaded From Oneyac.com

单击下面可查看定价，库存，交付和生命周期等信息

>>TE Connectivity(泰科)

Downloaded From Oneyac.com