THIS DRAWING IS UNPUBLISHED. RELEASED FOR PUBLICATION -,- .
© COPYRIGHT - BY TYCO ELECTRONICS CORPORATION. ALL RIGHTS RESERVED.

LOC	DIST
AD	25

REVISIONS

P	LTR	DESCRIPTION	DATE	DWN	APVD
	01	REVISED PER ECO-07-018583	22AUG07	DH	DB

1. HOUSING MATERIAL: GLASS-FILLED POLYMER.
2. POST MATERIAL: COPPER ALLOY.
3. POST FINISH: DIN 41612 CLASS 2 IN CONTACT AREA. TIN PLATE ON POSTS.
4. FOR 1.57[.062] THICK PC BOARD APPLICATIONS, USE SEATING TOOL 768211-4. PROGRAMMABLE SEATING TOOL 768216-4 WITH PUSH PINS FOR MAKE FIRST CONTACTS ONLY, CAN ALSO BE USED.
5. PC BOARD HOLES REQUIRED FOR ACTION PIN CONTACTS ARE 1.151[.0453] DRILL DIAMETER PLATED THROUGH WITH 0.02-.0.08[.001-.003] COPPER AND 0.008[.0003] MINIMUM TIN-LEAD PLATING. FINISHED HOLE AFTER PLATING, 0.94-1.09[.037-.043] DIAMETER.
6. PART NUMBER, DATE CODE MARKED THIS APPROXIMATE AREA.
7. MARKING ON THIS SIDE.
8. FOR "MFBL" APPLICATIONS, A 2.36[.093] MINIMUM THICK PC BOARD IS REQUIRED. PROGRAMMABLE SEATING TOOL 768216-4 MUST BE USED.
9. TO BE 4.16[.164] REF FOR LAST MAKE PINS AFTER SEATING. POST LENGTH DIFFERENCE BETWEEN SHORT AND LONG PINS TO BE 0.76±0.2[.030±.008] AFTER SEATING.
10. THIS DIMENSION WILL BE 6.35±0.51[.250±.020] AFTER SEATING FOR PINS WITH 4.17[.164] REF MATING POST.

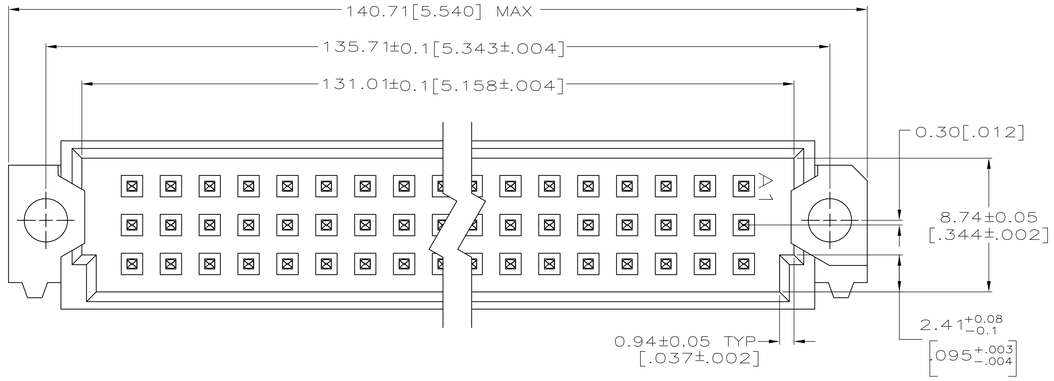

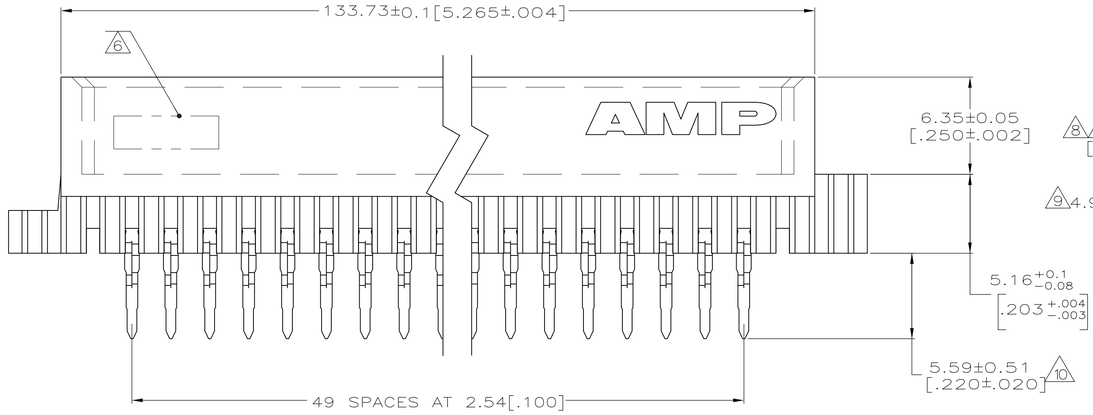

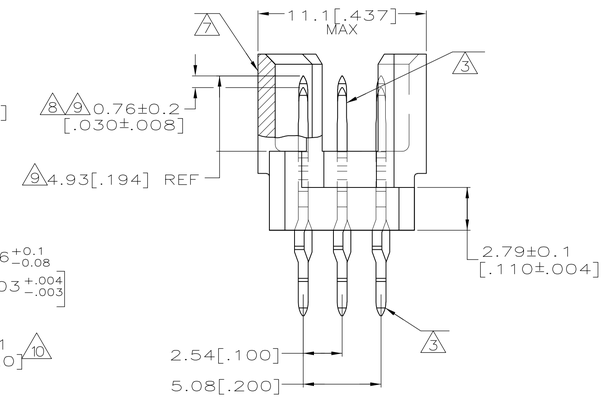

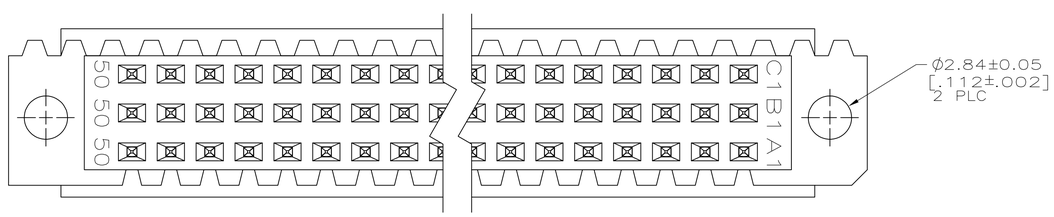

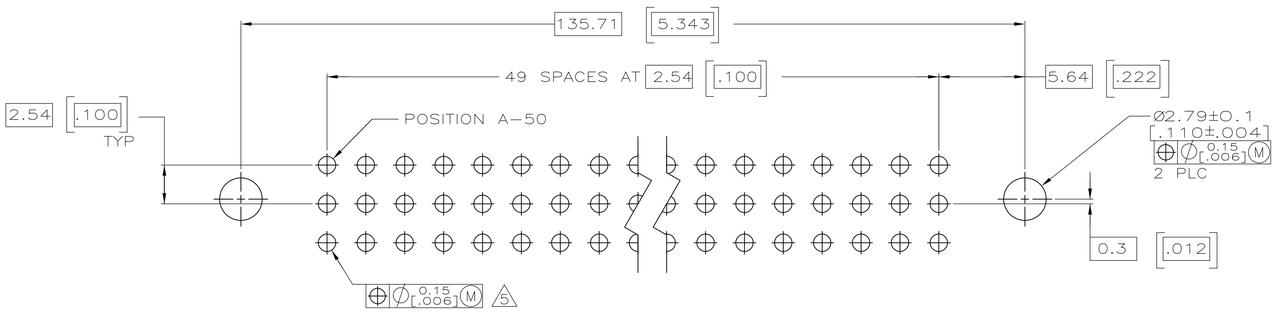

PC BOARD LAYOUT

1-50	X	X	X	150	5536096-5
POSITIONS LOADED	C	B	A	NO. OF LOADED POSITIONS	ASSY PART NUMBER
	ROWS LOADED				

THIS DRAWING IS A CONTROLLED DOCUMENT.

DIMENSIONS: mm [INCHES]

TOLERANCES UNLESS OTHERWISE SPECIFIED:
0 PLC ± -
1 PLC ± -
2 PLC ± -
3 PLC ± 0.13[.005]
4 PLC ± -
ANGLES ± -

MATERIAL 1 2
FINISH 3

DWN J. POLIGNONE 05MAY05
CHK A. SHARPE 05MAY05
APVD A. SHARPE 05MAY05
PRODUCT SPEC —
APPLICATION SPEC —
WEIGHT —

Tyco Electronics Corporation
Harrisburg, Pa 17105-3608

NAME
ASSEMBLY, PIN, EUROCARD, TYPE R, 150 POSITION, 6.35[.250] PRESS FIT POSTS, PROGRAMABLE

SIZE	CAGE CODE	DRAWING NO	RESTRICTED TO
A1	00779	C-5536096	—

CUSTOMER DRAWING | SCALE 5:1 | SHEET 1 OF 1 | REV 01

Downloaded From Oneyac.com

单击下面可查看定价，库存，交付和生命周期等信息

>>TE Connectivity(泰科)

Downloaded From Oneyac.com