THIS DRAWING IS UNPUBLISHED. RELEASED FOR PUBLICATION - ,- .
© COPYRIGHT - By - ALL RIGHTS RESERVED.

LOC	DIST
AD	39

REVISIONS

P	LTR	DESCRIPTION	DATE	DWN	APVD
	L3	REVISED PER ECO-11-004587	11MAR11	RK	HMR

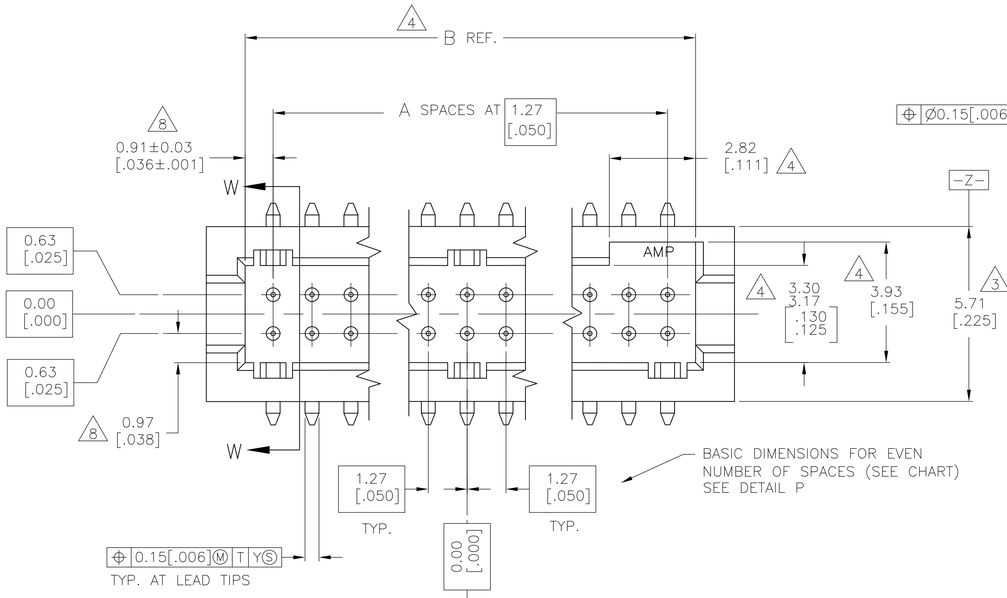

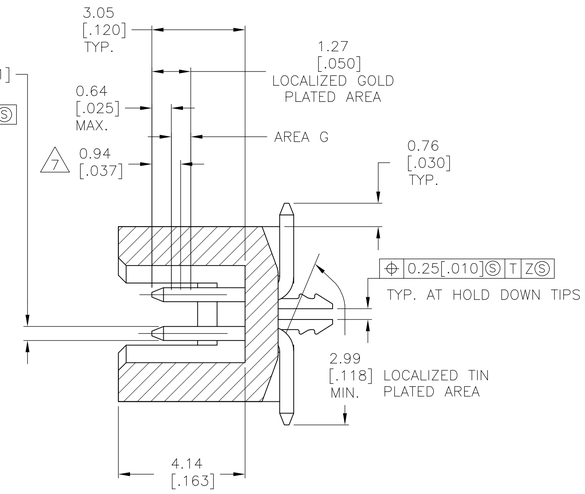

SECTION W-W

1. 0.00076[.000030] GOLD AT POINT OF MEASUREMENT, 0.00051[.000020] MIN AT THE END POINTS OF AREA G, (LOCALIZED GOLD PLATE AREA), 0.0038[.000150] TIN-LEAD ON LOCALIZED TIN PLATED AREA, ALL OVER 0.0013[.000050] NICKEL
2. USE 1.32±0.02 [.052±.001] DRILLED HOLE (#55 DRILL). FINISH TO BE TIN OVER 0.02 [.001] MIN COPPER.
3. DIMENSION APPLIES AT BASE OF SHROUD.
4. THE NOTED DIMENSIONS APPLY AT THE MATING FACE OF THE HOUSING.
5. 0.0038 [.000150] TIN-LEAD ON HOLD DOWN,ALL OVER 0.0013 [.000050] NICKEL.
6. IF PLANNING TO USE MORE THAN ONE MATING PAIR OF CONNECTORS TO INTERCONNECT 2 BOARDS, PLEASE REFER TO THE SPACING PARAGRAPH IN APPLICATION SPEC, #114-7010
7. POINT OF MEASUREMENT
8. DIMENSIONS NOTED APPLY FROM THE BASIC DIMENSION LINE (NOT THE CIRCUIT CAVITY CENTER LINE) TO THE SURFACE INDICATED.
9. 0.00076[.000030] GOLD AT POINT OF MEASUREMENT, 0.00051[.000020] MIN AT THE END POINTS OF AREA G, (LOCALIZED GOLD PLATE AREA), 0.0038[.000150] TIN ON LOCALIZED TIN PLATED AREA, ALL OVER 0.0013[.000050] NICKEL.
10. 0.0035[.000150] TIN ON HOLDDOWN, ALL OVER 0.0013[.000050] NICKEL
11. ROHS 2002/95/EC COMPLIANT.
12. OBSOLETE PARTS: OBSOLETE CIS STREAMLINING PER D.RENAUD/D.SINISI

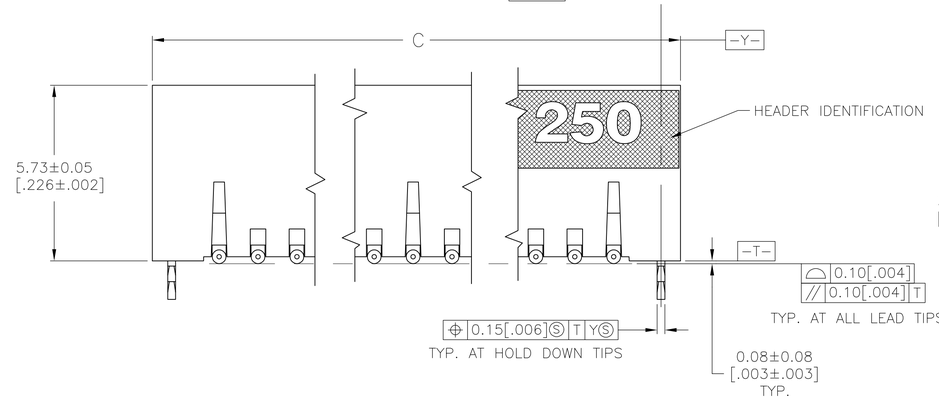

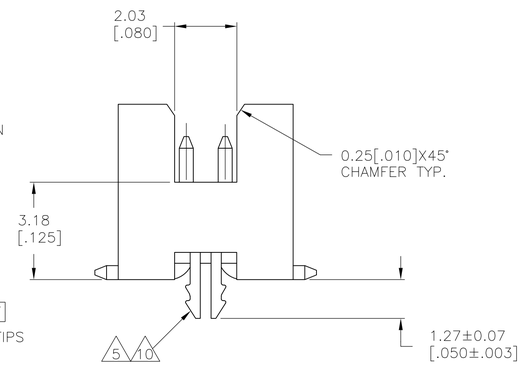

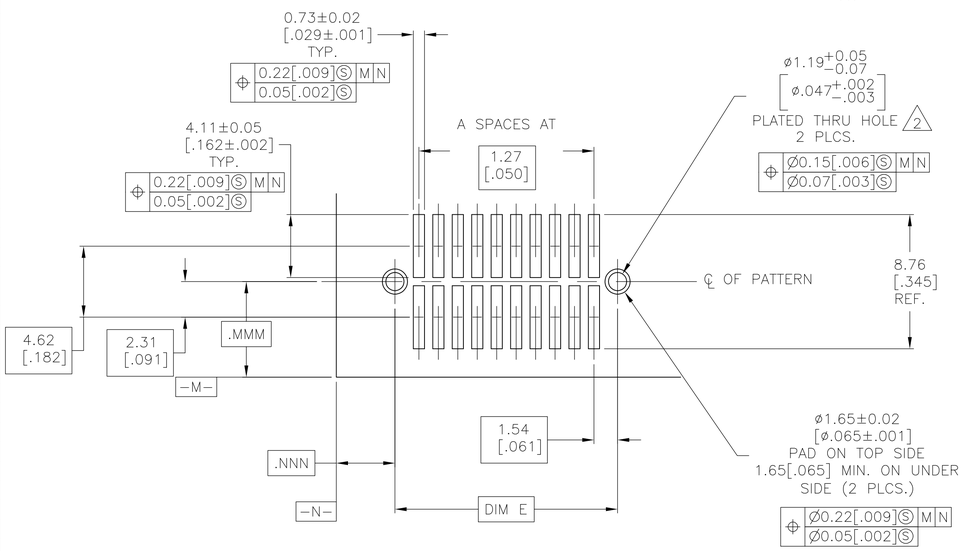

RECOMMENDED BOARD LAYOUT
SCALE-5:1

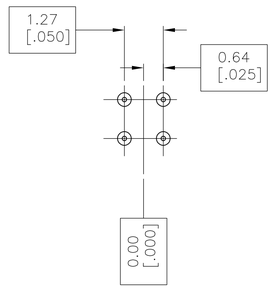

DETAIL P

BASIC DIMENSIONS FOR ODD NUMBER OF SPACES

	FINISH E	FINISH D	FINISH C	FINISH B	A	NUMBER OF POSITIONS	PART NUMBER
12 OBSOLETE	9 10 65.33 [2.572]	32.66 [1.286]	66.59 [2.622]	64.05 [2.522]	49	100	11 6-104655-1
	9 10 58.97 [2.322]	29.48 [1.161]	60.24 [2.372]	57.70 [2.272]	44	90	11 ~~6-104655-0~~
	9 10 52.63 [2.072]	26.31 [1.036]	53.89 [2.122]	51.35 [2.022]	39	80	11 5-104655-9
	9 10 46.28 [1.822]	23.13 [.911]	47.54 [1.872]	45.00 [1.772]	34	70	11 5-104655-8
	9 10 39.93 [1.572]	19.96 [.786]	41.19 [1.622]	38.65 [1.522]	29	60	11 5-104655-7
	9 10 33.58 [1.322]	16.78 [.661]	34.84 [1.372]	32.30 [1.272]	24	50	11 5-104655-6
	9 10 27.23 [1.072]	13.61 [.536]	28.49 [1.122]	25.95 [1.022]	19	40	11 5-104655-5
	9 10 20.88 [.822]	10.43 [.411]	22.14 [.872]	19.60 [.772]	14	30	11 5-104655-4
	9 10 14.53 [.572]	7.26 [.286]	15.79 [.622]	13.25 [.522]	9	20	11 5-104655-3
12 OBSOLETE	9 10 11.98 [.472]	5.99 [.236]	13.25 [.522]	10.72 [.422]	7	16	11 ~~5-104655-2~~
	9 10 8.18 [.322]	4.08 [.161]	9.44 [.372]	6.90 [.272]	4	10	11 5-104655-1
	1 5 65.33 [2.572]	32.66 [1.286]	66.59 [2.622]	64.05 [2.522]	49	100	1-104655-1
OBSOLETE	1 5 58.97 [2.322]	29.48 [1.161]	60.24 [2.372]	57.70 [2.272]	44	90	~~1-104655-0~~
	1 5 52.63 [2.072]	26.31 [1.036]	53.89 [2.122]	51.35 [2.022]	39	80	104655-9
	1 5 46.28 [1.822]	23.13 [.911]	47.54 [1.872]	45.00 [1.772]	34	70	104655-8
	1 5 39.93 [1.572]	19.96 [.786]	41.19 [1.622]	38.65 [1.522]	29	60	104655-7
	1 5 33.58 [1.322]	16.78 [.661]	34.84 [1.372]	32.30 [1.272]	24	50	104655-6
	1 5 27.23 [1.072]	13.61 [.536]	28.49 [1.122]	25.95 [1.022]	19	40	104655-5
	1 5 20.88 [.822]	10.43 [.411]	22.14 [.872]	19.60 [.772]	14	30	104655-4
	1 5 14.53 [.572]	7.26 [.286]	15.79 [.622]	13.25 [.522]	9	20	104655-3
OBSOLETE	1 5 11.98 [.472]	5.99 [.236]	13.25 [.522]	10.72 [.422]	7	16	~~104655-2~~
	1 5 8.18 [.322]	4.08 [.161]	9.44 [.372]	6.90 [.272]	4	10	104655-1

THIS DRAWING IS A CONTROLLED DOCUMENT.

DIMENSIONS: mm [INCHES]

TOLERANCES UNLESS OTHERWISE SPECIFIED:
0 PLC ± -
1 PLC ± -
2 PLC ± 0.13[.005]
3 PLC ± -
4 PLC ± -
ANGLES ± 0°30'

MATERIAL
HOUSING: LCP, COLOR-BLACK
POST: PHOS BRONZE
HOLD WOWN: COPPER ALLOY

FINISH
SEE TABLE

DWN KATE HELM 08/07/91
CHK D. GORENC 8/12/91
APVD D. FORKER 8/12/91
PRODUCT SPEC 108-1332
APPLICATION SPEC 114-7010
WEIGHT -

TE Connectivity

NAME
HEADER ASSEMBLY, SURFACE MOUNT, AMPMODU 50/50 GRID (6.35[.250] MATED HEIGHT)

SIZE	CAGE CODE	DRAWING NO	RESTRICTED TO
A1	00779	C-104655	-

CUSTOMER DRAWING | SCALE 10:1 | SHEET 1 OF 1 | REV L3

4805 (3/11)

Downloaded From Oneyac.com

单击下面可查看定价，库存，交付和生命周期等信息

>>TE Connectivity(泰科)

Downloaded From Oneyac.com