THIS DRAWING IS A CONTROLLED DOCUMENT.

LOC	DIST
CM	53

REVISIONS

P	LTR	DESCRIPTION	DATE	DWN	APVD
	0	RELEASED	23-APR-02	KW	DC

1. ACCOMODATES CABLE TIES WITH TENSILE VALUE OF 222.5 NEWTONS [50 LBS] MAXIMUM.

2. AS SHOWN - PACKAGED 100 PER SEALED POLY BAG WITH LABEL TO CONTAIN AMP P/N DESCRIPTION,QUANTITY,DATE CODE, AND U.L. RECOGNITION MARK.

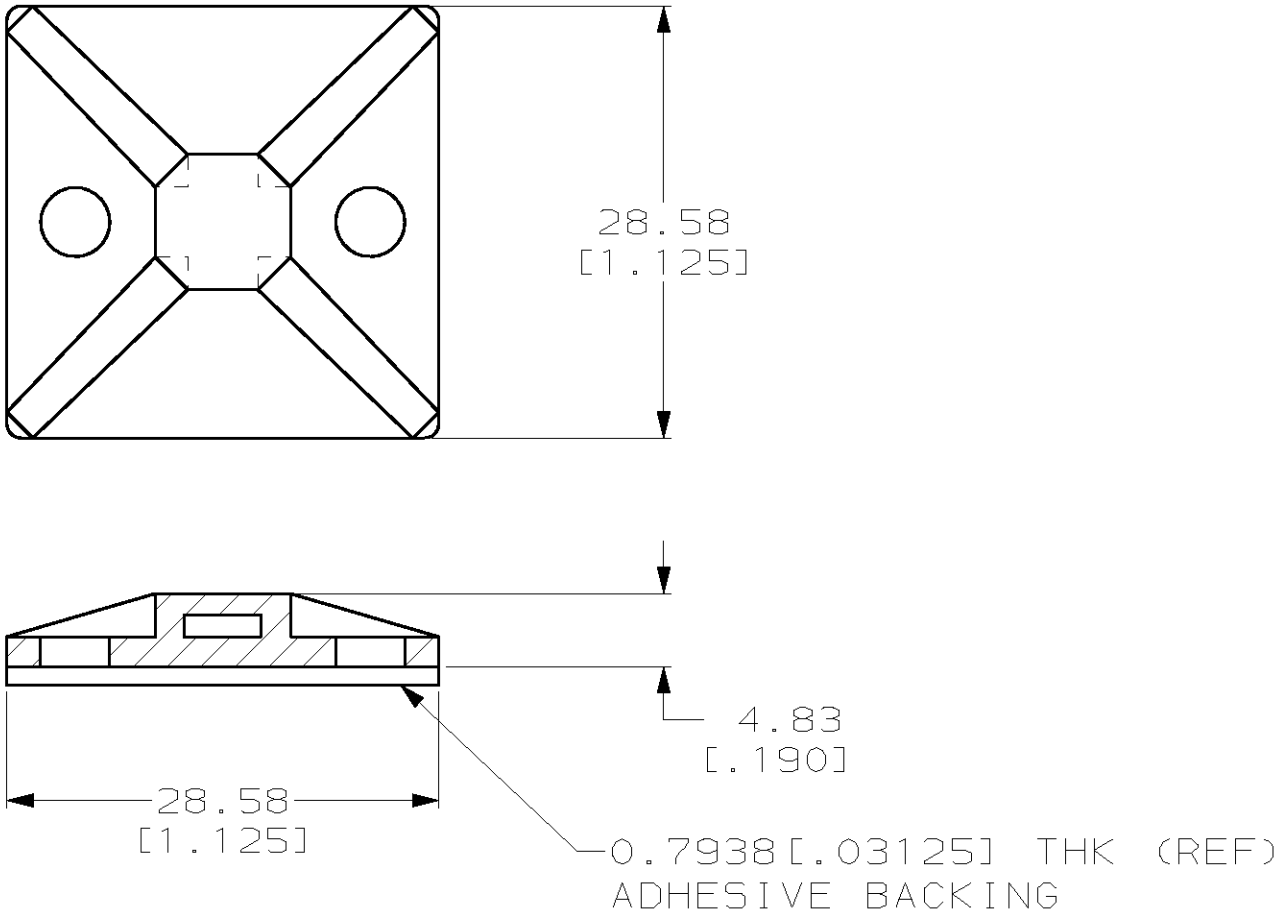

THIS DRAWING IS UNPUBLISHED. RELEASED FOR PUBLICATION ,19 .
© COPYRIGHT 19 BY AMP INCORPORATED. ALL RIGHTS RESERVED.

METRIC

608803-1
PART NUMBER

DIMENSIONS: mm [INCHES]

TOLERANCES UNLESS OTHERWISE SPECIFIED:

0 PLC	±-
1 PLC	±-
2 PLC	±0.51 [.02]
3 PLC	±-
4 PLC	±-
ANGLES	±0°30′

DWN K. WHITAKER 23-APR-2002
CHK D. COLEY 23-APR-2002
APVD D. COLEY 23-APR-2002

PRODUCT SPEC –

APPLICATION SPEC –

WEIGHT –

MATERIAL NYLON,WHITE

FINISH –

AMP Incorporated
Harrisburg, PA 17105-3608

NAME 4 WAY CABLE TIE MOUNT
2 #8 SCREW HOLES, W/ADHESIVE

SIZE	CAGE CODE	DRAWING NO	RESTRICTED TO
A4	00779	C- 608803	–

CUSTOMER DRAWING

SCALE 2:1 SHEET 1 OF 1 REV 0

AMP 1469-35 REV 11JUN97

Downloaded From Oneyac.com

单击下面可查看定价，库存，交付和生命周期等信息

>>TE Connectivity(泰科)

Downloaded From Oneyac.com