THIS DRAWING IS UNPUBLISHED. RELEASED FOR PUBLICATION 20
© COPYRIGHT 20 BY - ALL RIGHTS RESERVED.

AG	WIRE RANG 夹线范围 (Ø)	Ø	GL	GL (Lengthen加长)	H	SW	DESCRIPTION 产品描述	PART NUMBER WITH TE LOGO 成品料号 (带TE Logo)	PART NUMBER WITHOUT LOGO 成品料号(不带TE Logo)
M32x1.5	18-25	25.4		12	31	40	DLX-32-LM	METAL CABLE GLAND M32 (18-25),THREAD LENGTHEN 金属加长螺纹接头 M32 (18-25)	T3609320202-000
M32x1.5	13-20	20.4		12	31	40	DLX-32-LMT	METAL CABLE GLAND M32 (13-20),THREAD LENGTHEN 金属加长螺纹接头 M32 (13-20)	T3609320212-000
M63x1.5	37-44		10		41	70	DLX-63-M	METAL CABLE GLAND M63(37-44) 金属接头 M63 (37-44)	T3609630102-000
~~M63x1.5~~	~~29-35~~	~~36~~	~~10.5~~		~~40~~	~~67~~	~~DLX-63-MT~~	~~METAL CABLE GLAND M63(29-35) 金属接头 M63 (29-35)~~	~~T3609630112-000~~
M50x1.5	32-38	39	9		37	57	DLX-50-M	METAL CABLE GLAND M50(32-38) 金属接头 M50 (32-38)	T3609500102-000
M50x1.5	29-36	36.5	9		37	57	DLX-50-M	METAL CABLE GLAND M50(29-36) 金属接头 M50 (29-36)	T3609500122-000
M50x1.5	22-32		9		38.5	55	DLX-50-MT	METAL CABLE GLAND M50(22-32) 金属接头 M50 (22-32)	T3609500112-000
M40x1.5	22-32	33	8		37	50	DLX-40-M	METAL CABLE GLAND M40(22-32) 金属接头 M40 (22-32)	T3609400102-000 ~~T3609400102-001~~ 2
M40x1.5	20-26	26.5	8		37	50	DLX-40-MT	METAL CABLE GLAND M40(20-26) 金属接头 M40 (20-26)	T3609400112-000
M32x1.5	18-25	25.4	8		31	40	DLX-32-M	METAL CABLE GLAND M32(18-25) 金属接头 M32 (18-25)	T3609320102-000
M32x1.5	13-20	20.4	8		31	40	DLX-32-MT	METAL CABLE GLAND M32(13-20) 金属接头 M32 (13-20)	T3609320112-000
M25x1.5	13-18	18.4		12	26	30	DLX-25-LM	METAL CABLE GLAND M25 (13-18),THREAD LENGTHEN 金属加长螺纹接头 M25 (13-18)	T3609250202-000
M25x1.5	13-18	18.4	7		26	30	DLX-25-M	METAL CABLE GLAND M25(13-18) 金属接头 M25 (13-18)	T3609250102-000
M25x1.5	9-16	16.4		12	26	30	DLX-25-LMT	METAL CABLE GLAND M25 (9-16),THREAD LENGTHEN 金属加长螺纹接头 M25 (9-16)	T3609250212-000
M25x1.5	9-16	16.4	7		26	30	DLX-25-MT	METAL CABLE GLAND M25(9-16) 金属接头 M25 (9-16)	T3609250112-000
M20x1.5	10-14	13.8	6		24	24	DLX-20-MB	METAL CABLE GLAND M20(10-14) 金属接头 M20 (10-14)	T3609200122-000
M20x1.5	6-12	12.2		10	23	22	DLX-20-LM	METAL CABLE GLAND M20 (6-12),THREAD LENGTHEN 金属加长螺纹接头 M20 (6-12)	T3609200202-000
M20x1.5	6-12	12.2	6		23	22	DLX-20-M	METAL CABLE GLAND M20(6-12) 金属接头 M20 (6-12)	T3609200102-000
M20x1.5	5-9	9.2		10	23	22	DLX-20-LMT	METAL CABLE GLAND M20 (5-9),THREAD LENGTHEN 金属加长螺纹接头 M20 (5-9)	T3609200222-000
M20x1.5	5-9	9.2	6		23	22	DLX-20-MT	METAL CABLE GLAND M20(5-9) 金属接头 M20 (5-9)	T3609200112-000
M16x1.5	5-10	10.2		10	22	20	DLX-16-LMB	METAL CABLE GLAND M16 (5-10),THREAD LENGTHEN 金属加长螺纹接头 M16 (5-10)	T3609160222-000
M16x1.5	5-10	10.2	6		22	20	DLX-16-MB	METAL CABLE GLAND M16(5-10) 金属接头 M16 (5-10)	T3609160122-000
M16x1.5	4-8	8.5		10	21	19	DLX-16-LM	METAL CABLE GLAND M16 (4-8),THREAD LENGTHEN 金属加长螺纹接头 M16 (4-8)	T3609160202-000
M16x1.5	4-8	8.5	6		21	19	DLX-16-M	METAL CABLE GLAND M16(4-8) 金属接头 M16 (4-8)	T3609160102-000
M16x1.5	2-6	6.5	6		21	19	DLX-16-MT	METAL CABLE GLAND M16(2-6) 金属接头 M16 (2-6)	T3609160112-000
M12x1.5	3-6.5	6.8		8	25	14	DLX-12-LM	METAL CABLE GLAND M12 (3-6.5),LENGTHEN 金属加长接头 M12 (3-6.5)	T3609120202-000
M12x1.5	3-6.5	6.8	5		25	14	DLX-12-M	METAL CABLE GLAND M12(3-6.5) 金属接头 M12 (3-6.5)	T3609120102-000
M12x1.5	2-5	5.3	5		25	14	DLX-12-MT	METAL CABLE GLAND M12(2-5) 金属接头 M12 (2-5)	T3609120112-000
~~PG48~~	~~37-44~~	~~44.5~~	~~10~~		~~41~~	~~65~~	~~DLX-48-MS~~	~~METAL CABLE GLAND PG48(37-44) 金属接头 PG48 (37-44)~~	~~T3609480101-000~~
~~PG48~~	~~29-35~~	~~36~~	~~10~~		~~38~~	~~64~~	~~DLX-48-MTS~~	~~METAL CABLE GLAND PG48(29-35) 金属接头 PG48 (29-35)~~	~~T3609480111-000~~
PG42	30-38		9		40	58	DLX-42-MS	METAL CABLE GLAND PG42(30-38) 金属接头 PG42 (30-38)	T3609420101-000
PG42	25-31	31.5	9		37	57	DLX-42-MTS	METAL CABLE GLAND PG42(25-31) 金属接头 PG42 (25-31)	T3609420111-000
PG36	22-32	33		15	39	50	DLX-36-LMS	METAL CABLE GLAND PG36 (22-32),LENGTHEN 金属加长接头 PG36 (22-32)	T3609360201-000
PG36	22-32	33	8		38	50	DLX-36-MS	METAL CABLE GLAND PG36(22-32) 金属接头 PG36 (22-32)	T3609360101-000
PG36	20-26	26.5	8		38	50	DLX-36-MTS	METAL CABLE GLAND PG36(20-26) 金属接头 PG36 (20-26)	T3609360111-000
~~PG29~~	~~18-25~~	~~25.4~~		~~15~~	~~33~~	~~40~~	~~DLX-29-LMS~~	~~METAL CABLE GLAND PG29 (18-25),LENGTHEN 金属加长接头 PG29 (18-25)~~	~~T3609290201-000~~
PG29	18-25	25.4	8		30	40	DLX-29-MS	METAL CABLE GLAND PG29(18-25) 金属接头 PG29 (18-25)	T3609290101-000 ~~T3609290101-001~~ 2
PG29	13-20	20.4	8		30	40	DLX-29-MTS	METAL CABLE GLAND PG29(13-20) 金属接头 PG29 (13-20)	T3609290111-000
PG21	13-18	18.4		12	25	30	DLX-21-LMS	METAL CABLE GLAND PG21 (13-18),LENGTHEN 金属加长接头 PG21 (13-18)	T3609210201-000
PG21	13-18	18.4	7		25	30	DLX-21-MS	METAL CABLE GLAND PG21(13-18) 金属接头 PG21 (13-18)	T3609210101-000
PG21	9-16	16.4	7		25	30	DLX-21-MTS	METAL CABLE GLAND PG21(9-16) 金属接头 PG21 (9-16)	T3609210111-000
PG16	10-14	13.8	6.5		23.5	24	DLX-16-MS	METAL CABLE GLAND PG16(10-14) 金属接头 PG16 (10-14)	T3609160101-000
PG16	7-12	12.2	6.5		23.5	24	DLX-16-MTS	METAL CABLE GLAND PG16(7-12) 金属接头 PG16 (7-12)	T3609160111-000
PG13.5	6-12	12.2	6.5		23.5	22	DLX-13.5-MS	METAL CABLE GLAND PG13.5(6-12) 金属接头 PG13.5 (6-12)	T3609130101-000
PG13.5	5-9	9.2	6.5		23.5	22	DLX-13.5-MTS	METAL CABLE GLAND PG13.5(5-9) 金属接头 PG13.5 (5-9)	T3609130111-000
PG11	5-10	10.2	6		24	21	DLX-11-MS	METAL CABLE GLAND PG11(5-10) 金属接头 PG11 (5-10)	T3609110101-000
PG11	3-7	7.2	6		24	21	DLX-11-MTS	METAL CABLE GLAND PG11(3-7) 金属接头 PG11 (3-7)	T3609110111-000
PG11			6		24	21	DLX-11-MSN	METAL CABLE GLAND,WITHOUT INNER SEALING 金属接头 PG11,无内封圈	T3609110121-000
PG9	4-8	8.5	6		24	17	DLX-9-MS	METAL CABLE GLAND PG9(4-8) 金属接头 PG9 (4-8)	T3609090101-000
PG9	2-6	6.5	6		24	17	DLX-9-MTS	METAL CABLE GLAND PG9(2-6) 金属接头 PG9 (2-6)	T3609090111-000
PG7	3-6.5	8.5		6	25	17	DLX-7-MES	METAL CABLE GLAND PG7 (3-6.5),LARGE 金属接头 PG7 (3-6.5),加大型	T3609070121-000
PG7	3-6.5	6.8	5		25	14	DLX-7-MS	METAL CABLE GLAND PG7(3-6.5) 金属接头 PG7 (3-6.5)	T3609070101-000
PG7	2-5	5.3	5		25	14	DLX-7-MTS	METAL CABLE GLAND PG7(2-5) 金属接头 PG7 (2-5)	T3609070111-000

1471-9 (3/13)

REVISIONS

P	LTR	DESCRIPTION	DATE	DWN	APVD
	B2	ECR-18-010224	30JUN2018	CH	CW
	B3	ECR-18-020020	26DEC2018	YC	CW
	B4	ECR-19-002559	16FEB2019	WQR	CW
	B5	ECR-19-004297	21MAR2019	SR	CW

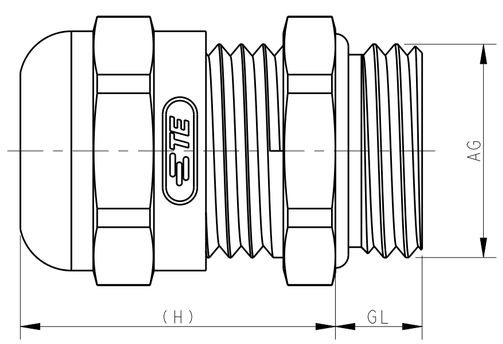

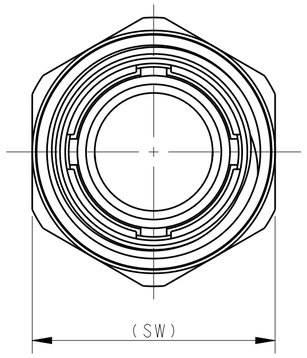

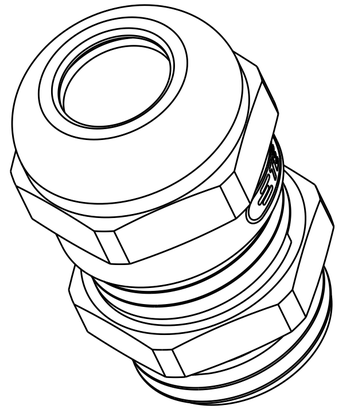

PART NUMBER SHOWN
WITH TE LOGO
成品料号 (带TE LOGO)

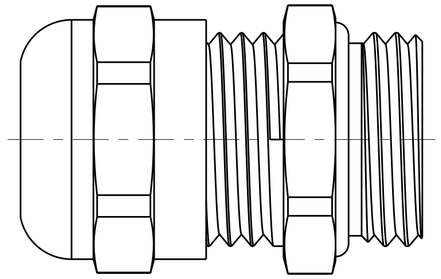

PART NUMBER SHOWN
WITHOUT LOGO
成品料号(不带TE LOGO)
EXCEPT THE TE LOGO, ALL DIMENSIONS ARE SAME AS CORRESPONDING PART NUMBER WITH TE LOGO
除TE LOGO差异外,不带TE LOGO与带TE LOGO对应型号之间,所有尺寸均相同.

NOTES/技术指标:

1.TECHNICAL CHARACTERISTICS/技术参数:
SHELL MATERIAL/主体材料 : NICKEL PLATED BRASS/铜镀镍
SEAL MATERIAL/密封材料: ELASTIC RUBBER/弹性橡胶
PINCH RING MATERIAL/夹紧件材料:PA
OPERATION TEMPERATURE/工作温度: -40°C-+100°C
PROTECTION DEGREE/防护等级: IP68
(EXCEPT T3609110121-000)
(料号T3609110121-000除外)
WIRE RANGE/夹线范围: SEE TABLE/见表格

2.OBSOLETE/料号已停用

THIS DRAWING IS A CONTROLLED DOCUMENT.

DIMENSIONS: mm

TOLERANCES UNLESS OTHERWISE SPECIFIED:
0 PLC ±-
1 PLC ±-
2 PLC ±-
3 PLC ±-
4 PLC ±-
ANGLES ±-

MATERIAL - -
FINISH - -

DWN GINO.YAO 05JUN2015
CHK CHRIS.WANG 05JUN2015
APVD XIANG.XU 05JUN2015
PRODUCT SPEC -
APPLICATION SPEC -
WEIGHT -

TE Connectivity

NAME METAL CABLE GLAND

SIZE A2 | CAGE CODE - | DRAWING NO C-T360XXXXXXX000 | RESTRICTED TO -

Customer Drawing | SCALE 5:1 | SHEET 1 OF 1 | REV B5

Downloaded From Oneyac.com

单击下面可查看定价，库存，交付和生命周期等信息

>>TE Connectivity(泰科)

Downloaded From Oneyac.com